RECOMMENDATIONS

Edition : 7 May 2026

The European Tyre, Rim and Valve Technical Organisation

Avenue d'Auderghem 22-28 – B 1040 Brussels – Belgium
Tel + 32 (0)2 - 344 40 59
E-mail : info@etrto.org - Internet : www.etrto.org

Revisions as per 7 May 2026

Changes versus the edition of 8 September 2025: changes are also indicated with grey highlighting in the text of the Recommendations.

Chapter	Subject	Page
E.T.R.T.O. Recommendations on Passenger Car Tyres	Added recommendations on asymmetric tyres in the paragraph “Directional tyres” and consequently changed the title of the paragraph to “Asymmetric and Directional tyres”	47
E.T.R.T.O. Recommendations on Passenger Car Tyres	Added two sentences in the paragraph “Directional tyres” to specify typical pattern geometry and marking	48
E.T.R.T.O. Recommendations on Commercial Vehicle Tyres	Added recommendation on “Wheel selection in dual mounting positions” in the subparagraph “Wheels” of paragraph “Care and maintenance”	57
E.T.R.T.O. Recommendations on Commercial Vehicle Tyres	Added two sentences in the paragraph “Directional tyres” to specify typical pattern geometry and marking	67
E.T.R.T.O. Recommendations on Motorcycle Tyres	Added two sentences in the paragraph “Directional tyres” to specify typical pattern geometry and marking	77
E.T.R.T.O. Recommendations on Rims and Tyres for Bicycle	Added two sentences in the paragraph “Directional tyres” to specify typical pattern geometry and marking	81
E.T.R.T.O. Recommendations on Agricultural Tractor and Implement Tyres	Added recommendation on “Wheel selection in dual mounting positions” in the subparagraph “Wheels” of paragraph “Care and maintenance”	86
E.T.R.T.O. Recommendations on Industrial and Lift Truck pneumatic tyres	Added recommendation on “Wheel selection in dual mounting positions” in the subparagraph “Wheels” of paragraph “Care and maintenance”	94
E.T.R.T.O. Recommendations on Earthmoving Equipment Tyres	Added recommendation on “Wheel selection in dual mounting positions” in the subparagraph “Wheels” of paragraph “Care and maintenance”	112

Index

Introduction 9

Definitions 10
Person skilled in the art 10
Rules of the art 10
State of the art 10
Specialist 10
Tyre care 10
Tyre repair 10
Hot / warm vulcanisation 11
Self – vulcanisation 11
Vulcanisable material for repair 11

E.T.R.T.O. Recommendations on storage 12
Storage of tyres, tubes, flaps and valves 12
Scope 12
Humidity 12
Light 12
Temperature 12
Ozone and chemical agents 13
Deformation 13
Rotation of stocks 13
Tyre storage methods 13
Transport conditions 13
Tubes 13
Flaps 14
“O” ring seals 14
Valves 14

E.T.R.T.O. Recommendations on tyre service life 15

E.T.R.T.O. Recommendations on tyre ageing 16

E.T.R.T.O. Recommendations on used tyres 17

E.T.R.T.O. Recommendations on puncture sealants for tyres in normal highway use 19

E.T.R.T.O. Recommendations on complaint form for tyres 21

E.T.R.T.O. Recommendations on inflation pressure 22

E.T.R.T.O. Recommendations on inflation of passenger and commercial

vehicle tyres using nitrogen 23

E.T.R.T.O. Recommendations on use of aircraft tyres and rims in other than aircraft service 24

E.T.R.T.O Recommendations on valves fitting operations 25

E.T.R.T.O Recommendations on mounting and dismounting of valves for tubeless rim of PC and CV tyres 26

E.T.R.T.O. Recommendations on Tyre Pressure Monitoring System for passenger car and commercial vehicle 29

E.T.R.T.O. Recommendations on cone of projection of tyre wheel/rim assembly 33

E.T.R.T.O. Recommendations on Passenger Car Tyres 34
- *Care and maintenance* 34
  - Tyre fitting and removal 34
  - Specific additional recommendations for tyre fitting and removal on a flexible wheel (J-FL rim contour) 35
  - Inflation pressure 37
  - Tyre load and speed 38
  - How to read the information marked on the tyre 39
  - Tyre storage 40
  - Wheels 40
  - Tyre damage 41
  - Tyre minimum tread depth 41
  - Tyre grooving and siping 41
  - Tyre repair and retreading 42
  - Tyre ageing 42
  - Tyre/rim combinations 42
- *Selection of replacement tyres* 43
  - General 43
  - Mixed fitments 44
  - Tyres marked with a prefix “P” 44
  - M+S tyres 44
- *Use of “summer” tyres at very low ambient temperature* 46
- *Downgraded tyres* 46
- *Asymmetric and Directional tyres* 47
- *Tyres with run flat capability* 48
  - Repairing 49
  - Retreading 50
  - Retro fitting 50
  - Replacement tyre fitment 50
  - Mixing tyres with run flat capability with standard radial tyres 50
  - Mixing of different brands 53
- *Tyres with internal foam layer* 53
- *Used Passenger Car Tyres* 53

Tyre Pressure Monitoring System for passenger car tyres 53

E.T.R.T.O. Recommendations on Commercial Vehicle Tyres 54
Introduction 54
Care and maintenance 54
Tyre fitting 54
Tyre removal 55
Inflation pressure 56
Storage of tyres, tubes and flaps 57
Wheels 57
Tyre damage 57
Tyre minimum tread depth 58
Tyre regrooving 59
Tyre repair and retreading 61
Tyre ageing 61
Tyres subjected to electrical discharges 61
Tyre/rim combinations 61
Choice of valves 61
TPMS valves assembly to the rim 62
Selection of replacement tyres 62
General 62
Tyre load and speeds 62
How to read the information marked on the tyre 63
Mixed fitments 64
M+S C-type tyres 65
Downgraded tyres 67
Directional tyres 67
Tyre use and maintenance for motor-caravans (or motor homes) 68
Fit the right tyres 68
Referring to the "service description" 68
General recommendations for motor-caravans (or motor homes) 69
Check the pressures 69
Tyre care 69
Do not overload 69

E.T.R.T.O. Recommendations on Motorcycle Tyres 70
Care and maintenance 70
Tyre fitting and removal 70
Inflation pressure 71
How to read the information marked on the tyre 72
Storage of tyres and tubes 73
Wheels 73
Divided wheels 73
Tyre damage 74
Tyre minimum tread depth 74
Tyre grooving and siping 75
Tyre repair 75
Tyre ageing 75

Tyre/rim combinations 75
Selection of replacement tyres 76
Tyres run-in 76
Downgraded tyres 76
Tyres for test rigs / rolling roads 76
Directional tyres 77

E.T.R.T.O. Recommendations on Rims and Tyres for Bicycles 78
Tyre fitting for normal crotchet type rims 78
Tyre fitting and removal for tubeless tyres 79
Tubeless ready tyre 80
Directional tyres 81

E.T.R.T.O. Recommendations on Agricultural Tractor and Implement Tyres 82
Care and maintenance 82
Tyre fitting and removal 82
Inflation pressure 85
Liquid ballasting 85
Tyres additives 85
Tyre storage 85
Seasonal tyre handling 86
Wheels 86
Tyre repair and retreading 86
Tyre damage 87
Tyre maintenance 87
Tyre ageing 87
Tyres subjected to electrical discharges 87
Downgraded tyres 88
Selection of replacement tyres 88
General 88
Tyre replacement 88
Tyre mixing 88
Tyre load and speed 89
How to read the information marked on the tyre 89
Optional marking of tyre uniformity 90
Agricultural tyres : low point first harmonic of radial run-out 90

E.T.R.T.O. Recommendations on Industrial and Lift Truck Pneumatic Tyres 91
Introduction 91
Care and maintenance 91
Tyre fitting 91
Tyre or wheel removal 92
Inflation pressure 93
Storage of tyres, tubes and flaps 93
Wheels 93
Divided wheels 94
Tyre loads and speeds 94
Special applications 95

Tyres additives 95
Tyre inspection 95
Tyre minimum tread depth 95
Tyre repair and retreading 96
Tyre ageing 96
Tyres subjected to electrical discharges 96
Tyre/rim combinations 96
Selection of replacement tyres 97
General 97
Tyres loads and speeds 97
Mixed fitments 97
Downgraded tyres 98

E.T.R.T.O. Recommendations on Industrial and Lift Truck Solid Tyres 99
Introduction 99
General recommendations 99
Load and speed ratings of tyres 99
Special service conditions 99
Care of tyres 100
Ageing of tyres 100
Tyre replacement 100
Tyre mixing 101
Tyre storage 101
Regrooving and retreading of tyres 101
Specifics on rubber solid tyres and pneumatic tyre rims 101
Tyre fitting 101
Tread wear 102
Introduction 102
Scope 102
Definitions 102
Hazards of excessive tyre tread wear 102
Reduction of hazards 103
Tyre tread wear limits 103
Specifics on rubber solid tyres (cylindrical and conical base) 104
Tyre fitting 104
Wear limit 105

E.T.R.T.O. Recommendations on Earthmoving Equipment Tyres 106
Introduction 106
Care and maintenance 106
Fitting and removal 106
Tyre fitting 106
Tyre additives 107
Tyre removal 107
Inflation pressure 108
Nitrogen gas inflation for earthmover tyres 109
Liquid ballasting 110
Tyre storage 111

Handling of tyres, tubes, flaps, "O" ring seals and rims 111
Dismounted tyres 111
Mounted tyres 111
Wheels 112
Tyre damage 112
Minimum tread depth and regrooving 112
General 113
Technical requirements 113
Tyre repairing and retreading 114
Tyre ageing 115
Tyres subjected to electrical discharges 115
Tyre/rim combinations 115
Selection of replacement tyres 116
General 116
Tyre load and speeds 116
Mixed fitments 116

Introduction

The tyres made by European tyre manufacturers, incorporating advanced technology developed over seventy five years experience, have reached a very high standard of quality and reliability.
Although these tyres have a large built-in safety margin, they must be treated with maximum care and attention. It is essential therefore that the user who, in the main, is responsible for his own safety and the safety of others, should not abuse this safety margin.
The following *E.T.R.T.O. Recommendations* outline primary rules of tyre usage. They are not exclusive. They are based on sound knowledge and experience and will enable users to obtain good service from their tyres, rims and valves, but as they give only general advice, they cannot take into account special conditions of use and every different type of vehicle.
In consequence, the application of *E.T.R.T.O. Recommendations* does not absolve the user of them from any responsibilities or legal obligations that may be required and which may vary between countries.

Although great care has been taken in the compilation and preparation of this Position Statement to ensure accuracy, the publisher cannot in any circumstances accept responsibility for errors or omissions given in this publication.

Tyres are the only contact between the car and the road. Safety in all conditions of driving depends on a relatively small area of road contact. It is therefore of paramount importance that tyres should be maintained in good condition at all times and that when the time comes to change them the correct replacements are fitted.
The tyres fitted to your vehicle as original equipment were selected by the vehicle and tyre manufacturers taking into account all aspects of the vehicle's operation. Changes in tyre size, structure, load and speed rating should not be made without first seeking advice from the tyre or vehicle manufacturer as the effect on safety, car behaviour and clearances must be considered.

E.T.R.T.O. Recommendations contain no guarantees or information about characteristics whatsoever giving rise to liability, either expressly or by implication including with respect to the current validity, accuracy, completeness and quality of the information concerned.
E.T.R.T.O. accepts no liability in connection with its Recommendations.
Liability for any direct or indirect loss/damage, claims for compensation and/or consequential damage of whatever kind and whatever the legal basis, suffered as a result of E.T.R.T.O. Recommendations, is hereby excluded.

Definitions

Person skilled in the art

Is considered as skilled in the art, the person or the corporate body whose main activity is the manufacture or the distribution to a third party of new, second-hand or retreaded tyres, and who is registered as such to the register of commerce or to the trade register and who uses the relevant equipment following the rules of the art.

Rules of the art

The rules of the art correspond to all the technical instructions, standards and laws concerning the use, service and maintenance of tyres.

State of the art

It is, at a precise moment, all the knowledge within the comprehension of professionals of a sector or of trade, which are complementary to the law or the regulations by being transmitted by writing or orally.

Specialist

A person entitled to perform the specific operation and acting on behalf of a firm qualified to practice said activity.

Tyre care

Tyre care includes repair and restoration to an usuable state of a damaged tyre.

Tyre repair

Tyre repair is the permanent elimination of a tyre damage by suitable materials and methods in order to use the tyre unlimited according to the service description marked on the tyre.

Hot / warm – vulcanisation

Procedure to put on and to vulcanize material for repair by heat and pressure with specified temperatures in accordance with the recommendations of the manufacturers or the suppliers of the repair material.

Self – vulcanisation

Procedure to put on and to vulcanize material for repair by suitable bonding ingredients at normal ambient temperatures in accordance with the recommendations of the manufacturers or the suppliers of the repair material.

Vulcanisable material for repair

- **Combination plug patch**
  A shaped all-rubber pre-vulcanized component for repair being the plug for filling and repairing the penetration.

- **Repair - patch**
  Flat component for repair with reinforcing material being prepared depending on its dimensions and applications (is mainly used for major repairs).

- **Repair patch for tubes**
  Flat stretchable all rubber repair component.

E.T.R.T.O. Recommendations on storage

Storage of tyres, tubes, flaps and valves

Scope

This recommendation applies to all tyres stored for any period whether fitted on rims or not. In view of the potential influence of temperature, humidity, light, heat, ozone and chemical agents on tyres, the following storage recommendations are made.

Humidity

Moist conditions should be avoided. Care must be taken to ensure no condensation occurs.
Whenever possible, tyres should be stored inside a cool, dry and aerated area.
If tyres are stored outdoors, they should be covered by an appropriate covering to protect against water and moisture.
Tyres destined for retreading/repairing must be thoroughly dried out beforehand.

Light

There should be protection from sunlight and strong artificial light with a high ultra-violet content.

Temperature

The storage temperature should be below 35°C and preferably below 25°C. At temperatures exceeding 50°C, particularly in the absence of proper rotation of stocks, certain forms of deterioration may be accelerated sufficiently to affect the ultimate service life. Direct contact with pipes and radiators must be avoided.
The effects of low temperature are not permanently deleterious, but can cause the products to stiffen. Care should be taken therefore to avoid distorting them during handling at that temperature. When they are taken from low temperature storage for immediate use, their temperature should be raised to approximately 20°C throughout before they are put into service.

Ozone and chemical agents

As ozone is particularly harmful, storage rooms should not contain any equipment generating ozone such as fluorescent lighting with high ultra-violet content, mercury vapor lamps, electrical machines or other equipment which may produce sparks or other electrical discharges. Combustion gases and vapors which may produce ozone via photo-chemical processes should also be excluded.
Solvents, fuels, lubricants, chemicals, acids, disinfectants and the like should not be kept in the storage rooms. Rubber solutions should be stored in a separate room and the administrative regulations on the storage and handling of inflammable liquids must be observed.

Deformation

Products should be stored in a relaxed condition free from tension, compression or other forces causing permanent distortion.

Rotation of stocks

Storage time for never mounted tyres is to be minimized and an appropriate First In First Out (FIFO) procedure should be implemented.

Tyre storage methods

Tyres can be stored in an upright position in a single layer on shelf racks. Tyres can also be stored interlaced (fishbone) as well as stacked horizontally (stovepipe) one on top of another but in this case the height of the stacks or interlacing should be limited to avoid permanent deformation of the tyres on the bottom layers as well as any stability issues.
When fitted on rims, tyres should be preferably stored inflated in an upright position or in a single layer on shelf racks. Tyres can be also stacked horizontally (stovepipe) one on top of the other, but in this case the height of the stacks should be limited to avoid any stability issues.

Transport conditions

All before mentioned storage methods apply as well for transport. When tyres must be transported in closed containers which are not air-conditioned the duration of storage should be limited as much as possible to avoid potential tyre degradation. In case of obvious visual tyre deformation, time should be allowed to recover to original shape when inflated.

Tubes

The above paragraphs concerning, light, temperature, ozone and chemical agents also apply to tubes.
Tyre tubes should either be slightly inflated, dusted with talcum and placed in the tyres, or stored in a deflated condition in small stacks with a maximum height of 50 cm. on a clean, dry and flat surface.

Slatted palettes are not suitable since they might apply pressure at particular points.
If tubes are supplied by the manufacturers in cartons or wrapped in film, they should be left in these because the packing provides some degree of protection against contamination, ozone and the effects of light.

Flaps

The above paragraphs concerning, light, temperature, ozone and chemical agents also apply to flaps.
Flaps should preferably be placed with the tubes inside tyres, but if stored separately they should be laid flat on shelves free from contamination from dust, grease and moisture. Never suspend them - this can cause deformation and elongation.
If flaps are supplied by the manufacturers in cartons or wrapped in film, they should be left in these because the packing provides some degree of protection against contamination, ozone and the effects of light.

"O" Ring seals

Store O-Ring seals in a cool, dry place. Lay flat. Do not stack other materials on O-Rings.
If “O” rings seals are supplied by the manufacturers in cartons or wrapped in film, they should be left in these because the packing provides some degree of protection against contamination, ozone and the effects of light.

Valves

Store valves in a clean, cool, dry place.
If valves are supplied by the manufacturers in cartons or wrapped in film, they should be left in these because the packing provides some degree of protection against contamination, ozone and the effects of light. It’s recommended to protect valves from direct sunlight at all times and contamination of solvents, fuels and lubricants, oils or other chemicals. Prefered recommended storage temperature shall be below 25°C . If the storage temperature is below 15°C, temperature of the Valve should be raised for mounting to room temperature to avoid overstress during the installation.
Even if stored in correct conditions the rubber components of the valves increases hardness and decrease elastic properties while ageing, so the storage time has to be the shortest as possible. First In First Out (FIFO) managing of stock is recommended. It is also recommended to store valves for not longer than one year.

E.T.R.T.O. Recommendations on tyre service life

The serviceability of a tyre over time is a function of the storage conditions (temperature, humidity, position etc) and service conditions (load, speed, inflation pressure, road hazard damage, etc.) to which a tyre is subjected throughout its life. Since these conditions vary widely, accurately predicting the serviceable life of a tyre in advance is not possible. The older a tyre, the greater the chance that it will need to be replaced due to service-related conditions found upon inspection.

Tyres should be removed from service for several different reasons, including tread worn down to minimum depth, signs of damage (cuts, cracks, bulges, etc.) or signs of abuse (underinflation, overloading,etc). That is why it is recommended to have all tyres (including retreaded and spare tyres) fitted to light trucks, motorcycles, cycles, motor caravans, passenger cars, and trailers towed by such vehicles, inspected regularly. The tyre industry continues to support the consumer's role in the regular care and maintenance of their tyres. A monthly maintenance inspection by the consumer for proper inflation pressure and tread wear should be supplemented by recurring rotation, balancing and alignment services. Additionally, the condition of a tyre should be assessed regularly to determine if there are any tactile or visual signs that replacement is necessary.

For tyres that were supplied as original equipment on a vehicle (i.e. acquired by the consumer on a new vehicle), the OE vehicle manufacturer's tyre replacement recommendations have to be followed, if so provided.

These recommendations and guidelines cannot ensure that the tyres do not exhibit an undetectable internal condition that may render them to be unacceptable for continued service. Consumers are strongly encouraged to be cognizant of their tyres' visual condition as well as any change in dynamic performance such as increased noise or vibration, either of which could be an indicator that the tyres should be removed from service.

E.T.R.T.O. Recommendations on tyre ageing

Tyres age even if they have not been used or have only been used occasionally. Cracking of the tread and sidewall rubber, sometimes accompanied by carcass deformation, is possible indication of ageing. Old and aged tyres must be checked by tyre specialists to ascertain their suitability for further use.

Appropriate tyre storage conditions are essential for minimizing ageing of new tyres.
Whether fitted on rims or not, tyres must be stored in clean conditions free from exposure to sunlight or strong artificial light, heat, ozone (electrical machines) and hydrocarbons. When stored fitted on rims, inflation pressure should be reduced.
For more detailed storage recommendation see pages from 12 to 14.

In addition to this recommendation, see also specific “Tyre ageing” recommendations in the pertinent chapter of each specific product.

E.T.R.T.O. Recommendations on used tyres

Once tyres are applied to a vehicle and put into service (this includes spare tyres), they are considered “used”. The purpose of this recommendation is to address the potential risk associated with the installation of used tyres that have uncertain or unknown history of use, maintenance or storage conditions.
Such tyres may have damage that could eventually lead to tyre failure. This recommendation pertains to used tyres purchased as replacement tyres or as equipped on a used vehicle.
Not all tyre damages that can lead to tyre failure is outwardly visible. For instance, improper repairs or damage to a tyre’s inner-liner can only be observed by inspecting the inside of the tyre, demounted from the wheel. A qualified tyre specialist should inspect the internal and external condition of the used tyres prior to application. Also, in the case of a used vehicle purchased by a consumer, the only way to determine the condition of its tyres is to have them demounted by a tyre specialist for the same type of inspection. Same as for new tyres, it is also recommended not to fit used tyres with different tread pattern on the same axle.

For legal reasons, the installation of used tyres that exhibit any of the following characteristics is not allowed for use on public roads:

- Defaced or removed regulatory markings: the UNECE logo (e.g. E9) with the type approval number and the date of manufacture number (both located on the tyre sidewall) are mandatory for use of passenger car, commercial vehicles, motorcycle and agricultural tyres on the European public roads. If either of these logos/numbers are defaced or removed, the tyre does not meet regulatory requirements and cannot be used.
- Inadequate tread depth for continued service (i.e. nearly worn out). (e.g. in the EU Member States, a passenger car tyres with a tread depth of less than 1.6 mm at any point on the tyre is to be considered worn out being below the minimum legal limit).
- Passenger car or commercial vehicles or motorcycle winter tyres with less than the national legal tread depth limit for use in the winter season.
- Passenger car or commercial vehicle or motorcycle tyres labelled on the sidewall as “Not For Highway Use”, “NHS”, “For Racing Purposes Only”, “Agricultural Use Only”, “SL” (service limited agricultural tyre), or any other indication that the tyre is barred from use on public roads as fitment of Passenger Cars or Commercial Vehicles or Motorcycles.

E.T.R.T.O. recommends NOT TO INSTALL used tyres that exhibit any of the following characteristics:

- Any punctures or other penetrations, whether repaired or not.
  (Note: This is not meant to preclude the proper repair of a tyre installed on a vehicle when the end user is aware of the tyre’s history; e.g. retreaded tyres in which some repairs have been made to the lower part of the casing prior to retreading).
- Any inner-liner or bead damage.
- Indication of internal separation, such as bulges or local areas of irregular/fast treadwear indicating possible tread or belt separation.

- Indication of run-flat, under inflated and/or overloaded damage (e.g. inner-liner abrasion, mid- to upper sidewall abrasion and stamping deterioration, delamination, or discoloration, excessive tread shoulder wear, etc.).
- Showing any damage or wear exposing the body material of the tyre — cuts, cracks, bulges, scrapes, ozone cracking/weather checking, impact damage, punctures, splits, snags, etc.
- Involved in a recall or a replacement program.
  [Information on EU recall programs can be found at the following web address: https://interoperable-europe.ec.europa.eu/collection/rapex]
- Currently mounted on a rim that is bent, dented, cracked or otherwise damaged.
- Showing evidence of improper storage.
- Showing evidence or signs of exposure to chemical, fire, excessive heat damage, or other environmental damage.
- Designated as a “scrap tyre” or otherwise not intended for continued highway service.
- Showing evidence of prior use of tyre sealant or balance/filler material.
- Altered to look like new tyres (e.g. a passenger car tyre with regrooved tread).
- Showing any other condition which would be cause for permanent removal from service.

E.T.R.T.O. Recommendations on puncture sealants for tyres in normal highway use

The tyre industry recognises that there is a variety of different sealants on the market and that their continuous development necessitates a periodic review of its policy on their use. The diversity of products is such that the E.T.R.T.O can only offer general guidance.
The consumer should follow all the instructions given by the tyre manufacturer for these types of products.

In case of permanent tyre repair it is required to remove the tyre from the rim and thoroughly examine it for secondary damage not visible from an external inspection. The use of sealants does not meet these requirements and, thus, the industry does not regard them as a permanent repair.

Broadly speaking there are four categories of products :

- manufacturer-applied pre-puncture sealants
- manufacturer-built-in pre-puncture sealants
- after market pre-puncture sealants
- post-puncture sealants

Manufacturer-applied pre-puncture sealants are extremely viscous products applied by the manufacturer into the tyre immediately after the manufacturing process. These materials have been validated and applied by the tyre manufacturer. In most cases they provide a near instantaneous seal following a penetration.
The consumer should follow all the instructions given by the tyre manufacturer for these special service products.
When the consumer sees a nail or other penetrating object, he is advised to go to a dealer who should dismount the tyre, remove the object, inspect for internal damage, and determine if the tyre can be repaired and used for further service.

Manufacturer built-in pre-puncture sealants are extremely viscous products built into the tyre by the tyre manufacturer, during the manufacturing process. These special service tyres have been developed, manufactured, and validated by the tyre manufacturer. In most cases they provide a near instantaneous seal following a penetration. The consumer should follow all the service and repair instructions given by the tyre manufacturer for these special service products.

After market pre-puncture sealants are most commonly liquids applied to the tyre through the valve, at the time of fitting. Since these products are not approved by tyre manufacturers, the compatibility of the material with the tyre cannot be guaranteed. If the consumer chooses to use such sealants, he/she should strictly follow all of the instructions given by the manufacturer of the sealant.

Post-puncture sealants are regarded purely as a temporary 'get you to a service point' measure and are liquids applied through the valve following a puncture. In most cases a punctured tyre will have been run in an under-inflated or deflated condition before the sealant is applied. Therefore, there are some restrictions in continuing to use a tyre that may have sustained secondary damage. The consumer must confirm that the pressure has been completely restored to the correct level (either by the pump system or the self-inflating canister that supplies the sealant) and if not to take immediate corrective action to increase the inflation pressure to the correct level.

If the consumer chooses to use such sealants, he/she should strictly follow all of the instructions given by the manufacturer of the sealant. They allow a limited amount of driving at reduced speed in order to reach a service point where a permanent repair, after the tyre has been dismounted from the rim and internally inspected, can be performed.

Additional important considerations :

Where a pre-puncture sealant is used, it is essential that tyres are checked frequently for punctures and to identify any damage at the earliest stage. This will enable professional advice to be sought as to suitability for permanent repair.

The chemical composition of some aftermarket sealants may react with the material of the rims, tyres or valves with which it comes into contact, causing degradation of these components. Therefore consumers should check the sealant manufacturer's recommendations.

Sealants applied through the valve may impair the efficiency of the valve causing blockage or leakage as well as inhibiting routine pressure maintenance. Therefore consumers should check the sealant manufacturer's recommendations.

Liquid sealants may interfere with the operation of and/or cause permanent damage to the electronic sensor situated inside the tyre/rim of certain types of tyre pressure monitoring systems (TPMS). Therefore consumers should check the sealant manufacturer's recommendations.

Some sealants may be difficult to remove from a tyre to enable inspection and possible repair.

Liquid sealants may permeate the tyre casing, either through the liner or via the site of the damage, causing adverse long-term effects on the integrity of the structure.
Sealants are ineffective in tube type tyres.

Puncture damage sometimes renders tyres unrepairable and only a fully qualified professional specialist should be entrusted to determine if a safe repair is possible.

E.T.R.T.O. Recommendations on complaint form for tyres

The recommended complaint form for tyres, to conform to the directive (EU) 2019/771 on certain aspects concerning contracts for the sale of goods, is available on the E.T.R.T.O. website www.etrto.org under "Useful Documents". The form can be downloaded and customized with the manufacturer's logo and any additional information when required.

E.T.R.T.O. Recommendations on inflation pressure

These general recommendations collect only the items that are common to all products. Items which are specific of each single product are referred into the pertinent chapter and must be considered too.

Correct inflation pressures are of the highest importance for operating and driving safely. Most tyre injuries are due to, or aggravated by, incorrect inflation pressures.

Over-inflation causes the tyre to be more susceptible to impact damage and in extreme cases may result in rim deformation or even a tyre burst. It can also cause irregular wear.

Under-inflation causes over-heating and can greatly shorten the life of a tyre. It reduces road holding, increases fuel consumption and can cause irregular wear, bead dislodgement, internal damage and, ultimately, even tyre break-up.

The effects of over or under-inflation are not necessarily immediate. It may be a considerable time before they occur.

In general, tyres must be inflated according to the load they carry. Cold inflation pressures must always comply with the vehicle or tyre manufacturer's recommendations for the vehicle, type of tyre and the intended service. It is not recommended for performance and safety reason to operate with pressures different from those specified by the tyre and/or vehicle manufacturers. Anyhow to apply the appropriate pressure for the general range of applications, tyre manufacturers publish load/pressure tables.

Cold tyre pressures must be checked and, if necessary, adjusted regularly at least every two weeks, using an accurate pressure gauge* including the spare tyre. Because pressure rises when the tyres warm up in running, these checks should be made only when the tyres are at ambient temperature, commonly referred to as the cold inflation pressure.
Tyres are considered to be cold when they have not been run for at least one hour or have only been run at low speed for not more than two or three kilometres.
An increase of pressure during running, which may reach or even exceed 20%, is normal and is allowed by the design of the tyre. Therefore, the inflation pressure of warm tyres must never be adjusted back to the recommended cold values.

After checking the tyre pressure, ensure that the valve is not leaking and that a valve cap is fitted. Note that the valve cap, which should be of the sealing type, acts as a supplementary air seal and must be fitted at all times.

** reference Directive 2014/32/EU of the European Parliament and of the Council of 26 February 2014 on the harmonisation of the laws of the Member States relating to the making available on the market of measuring instruments (recast).*

E.T.R.T.O. Recommendations on inflation of passenger and commercial vehicle tyres using nitrogen

The use of nitrogen inflation systems by tyre retailers has increased in recent years.

E.T.R.T.O. notes that nitrogen is a gas – basically, nothing more than dry air with oxygen removed (air contains about 78% nitrogen). Because of its inert properties, nitrogen is often used in highly specialized service applications and/or demanding environments.
Applications such as aircraft, mining, and commercial/heavy use utilize nitrogen to help reduce the risk of internal combustion (fire) if the brake/rim/wheel components overheat. Also, dry nitrogen is used in professional racing to help reduce variation in inflation pressures (caused by moisture) where even small differences in pressure can affect vehicle handling at the extreme limits of performance.

For normal tyre service applications, nitrogen inflation is not required. However, nitrogen inflation is permissible as its properties may contribute to minor reductions in inflation pressure loss. Nevertheless, several other sources of pressure leaks, such as punctures, tyre/rim interface (bead), valve, valve/rim interface, and the wheel, may negate the benefit of nitrogen.
If the tyre inflation pressure is below the pressure specified on the vehicle placard, the tyre must be re-inflated – whether with air or nitrogen – to the proper inflation pressure. The pressure must also be adjusted when driving with higher loads, towing a trailer, driving at high speeds etc.
E.T.R.T.O. warns that depending on nitrogen alone to reduce the requirements for inflation maintenance may, in fact, lead to under inflated operation, which may result in premature tyre failure.
With the correct inflation pressure, you will achieve optimum tyre performance. This means your tyres will wear longer (economy), save fuel (environment) and increase traffic safety, whether using air or nitrogen in the tyres.
We remind you to check tyre pressure every two weeks and to do this when the tyres are cold.
Whether inflated by air or nitrogen, regular inflation pressure maintenance remains critical and necessary. Use of nitrogen alone is not a replacement for regular inflation pressure maintenance.

E.T.R.T.O. Recommendations on use of aircraft tyres and rims in other than aircraft service

Aircraft tyres and rims are designed specifically for aircraft service where the loads and deflections involved are different from those on ground vehicles and usage is intermittent. In addition, the specific rim diameters are usually different from those of rims for ground vehicles. Therefore, before using aircraft tyres in service other than that for which they were primarily designed, these factors must be taken into consideration and the tyre and rim manufacturers concerned must be consulted.
Consult rim and wheel manufacturers for confirmation of the strength of the rim/wheel for the intended service.

E.T.R.T.O. Recommendations on valves fitting operations

The condition of valve hole in the wheel should be checked before inserting the valve: particularly it is recommended that there are no sharp edges and/or burrs that can damage the valve during insertion. The surface of the rim around and inside the valve hole has to be clean.

Rubberized snap-in valves

Valve insertion area has to be always lubricated (i.e. water with soap or other dedicated rubber lubricant) to help mounting operations and reduce the possibility to damage the valve.
The application of a force in the direction of the axis of the valve hole during mounting is recommended to avoid bending the valve stem.
For this purpose it is also recommended to use an appropriate tyre valve mounting tool.
A valve shall be considered properly seated when the entire indicator ring, if present, is observed to be through the valve hole of the rim without damages or scratches.
In case of tyre renewal it's strongly recommended to replace the whole valve.

Metal clamp-in valves

The surface of the rim around the valve hole has to be flat and without damages to allow a proper support of nut and sealing.
Apply on nut torque recommended by manufacturer manual using a calibrated wrench.
Use carefully screwdriver and other hard tools to avoid any deep damage on valve/nut coating.
Use only the appropriate replacement valve core.
Always make sure that caps are installed on valve stems. Valve caps help protect valve stem and core from contamination.
Refer to dedicated chapter in ETRTO Recommendations and valve manufacturer manual in case of TPMS valves (metallic or rubberized).

E.T.R.T.O. Recommendations on mounting and dismounting of valves for tubeless rim of PC and CV tyres

1. Scope

The following recommendations are intended to help and clarify the valve mounting procedure on tubeless rims for PC and CV applications.

2. General recommendations

Inflation with dry air only: use inline air dryers, we recommend not to use inline lubricators for pneumatic tools.
In order to ensure a proper mounting and dismounting of valves on wheels (rim part), some precautions have to be taken into consideration listed in the following list:

2.1. Wheels, Tyres and Valves are safety components on a vehicle. They must not be modified, misused or overloaded. In case of any doubts contact a wheel, tyre or valve OEM (Original Equipment Manufacturer).
2.2. Repairs on wheels and valves are generally forbidden. If a repaired item is detected, contact your wheel, tyre or valve OEM. To be on the safe side replace such parts.
2.3. For the mounting or dismounting of valves use only qualified personnel. Consult the Wheel Manufacturer and the Valve Manufacturer´s recommendations.
2.4. The mounting and the dismounting should take place under defined conditions, room temperature, daylight or sufficient lighting. The environment should be comparable clean to avoid contamination of sealing and contact areas.
2.5. Before mounting check valve hole and valve. If there are production deficiencies such as burrs, sharp edges, obvious deformation, excessive rust/corrosion, contamination, do not continue the mounting process. Consult manufacturers' manuals.
2.6. It is recommended that while inserting the valve the wheel is in a stabilized position.
2.7. Utilize only appropriate tools or equipment for the manual or automatic mounting of valves. Contact your valve manufacturer to determine recommended tools.
2.8. After mounting a valve make sure that the orientation of the valve is correct.
2.9. After mounting a valve, make sure that it is seated correctly. If the snap in valve did not go to the correct position verify if the valve shall be replaced.
2.10. Reference to the valve suppliers manual to identify a TPMS on valve (If a rubber protusion or whatever the shape is present on the external side of the snap-in valve, it is highly probable that it is a valve with a direct TPMS. See valve section of the ETRTO Standards Manual).
2.11. If a new tyre is mounted on an existing wheel it is always recommended to use a new valve.
2.12. Make sure you are using the correct valve as suitable for the valve hole. Consult the wheel and valve manufacturers recommendations or manual. Do not use standard valves for high pressure applications.

2.13. After valve mounting, install and check valve extensions when necessary. Check the valve extensions for leaks and accessibility. Finally attach a valve dust cap.
2.14. Balancing powder: Before using balancing powder, please consult the tyre, wheel and valve manufacturer for recommendations and information on the use with their products. In case of use of balancing powder it is recommended to verify the correct performance of the valve (Inflation, deflation and leak control).
2.15. Tyre sealant: Unless the tyres sealant is part of the original equipment of the vehicle, before using tyre sealant, please consult the tyre, wheel and valve manufacturer for recommendations and information on the use with their products. After use of the tyre sealant it is recommended to change the valve core and check the status of the valve (cleanliness, damages, etc.). Valve substitution is preferable.

3. Snap-in valves

3.1. In order to facilitate proper mounting of valves, soapy lubricants may be used. Limit the use of such lubricants due to their corrosive effect on the wheels. It's recommended to use a lubricant with neutral pH value.
3.2. If during a mounting process a snap-in valve has been damaged (rubber peel, cracks, etc.) replace the valve immediately.
3.3. Special attention has to be taken in case of small valves for 8.8 mm valve holes as per ETRTO V2.03.9 and V2.03.10 . These valves are even more sensitive and must be carefully mounted. Replace in case of doubts.
3.4. When dismounting a snap-in valve, never cut off the head of the valve with a knife or similar. The rim will receive notches in highly stressed areas that may lead to fatigue cracks in the rim. By these kind of actions the wheel will lose warranty immediately.

4. Bolted type valves

4.1. For bolted type of valves make sure that you follow the recommendations of the valve supplier regarding the mounting procedure and the torque. Over-torque and under torque may lead to a damage of the wheel and valve leading to loss of air pressure. Do not damage nut or valve and wheel coating during the assembly to prevent corrosion.
4.2. When installing an aluminum valve or nickel-plated valves do not use yellow brass cores to prevent corrosion.
4.3. Use only lubricants recommended by the valve supplier. It is recommended to use a lubricant with neutral pH value.
4.4. In case a bolted metallic valve is used make sure that the valve hole flat area is big enough for this application (on external and tyre side) and clean. In cases of doubt contact the valve manufacturer or supplier.

5. Valves with TPMS sensor

5.1. In case of valves with TPMS sensor special attention is required for the assembly process. The TPMS sensor is sensitive to mechanical load. Keep it free from external forces during assembly and disassembly of valve and the tyre. It is recommended to contact the supplier of the Valve with TPMS sensor for details.

5.2. Prior to dismounting tyre from a wheel, identify if a TPMS sensor is in place (usually you can find an identification sign of the TPMS presence). If a TPMS sensor is in place make sure that dismounting process does not mechanically affect the valve and the TPMS sensor.

5.3. Do not apply lubricant to the TPMS sensor housing.

6. Valves storage

See page 14.

E.T.R.T.O. Recommendations on Tyre Pressure Monitoring System for passenger car and commercial vehicle

The Tyre Pressure Monitoring Systems can be based on different concepts and sensors. The diversity of products is such that the E.T.R.T.O can only offer general guidance. The consumer should follow all the instructions given by the manufacturer for these types of products.

The following typical systems are available:

- Indirect systems – no sensor in tyre or rim (usually only for passenger car).
- Direct systems – sensor fixed in valve (internally or externally) or on rim.
- Direct systems – sensor fixed inside tyre on the inner-liner.

Vehicle manufacturers may opt either for direct or for indirect systems. The systems may even differ between the different models or model years from a single vehicle manufacturer.

Workshop / service / dealer communication responsibilities during tyre service

Communications during tyre service are under responsibility of workshop/service dealer. The vehicle owner is to be informed that driving without functioning TPMS for vehicles which fall under the regulation in several countries could be considered as a non-compliance with local legislation. In those countries, every vehicle, which falls under the regulation, that enters a tyre workshop with a functional direct TPMS is supposed to leave the workshop with a functional TPMS. It is recommended to check national legislation related to TPMS application on vehicles in service.

Indirect systems:

The Indirect System reacts to the variation of the tyre‘s rolling circumference. The system hardware is usually based on existing ABS/ASR sensors, ABS/ASR control unit and a display unit. There is no additional hardware necessary. Re-calibration: reset of the system is necessary after tyre change or tyre inflation. Standard valves are normally used for this application.

Direct systems:

The Direct System delivers measured data. The data for each single wheel can be displayed. Additional sensors may be in the wheel assembly, control unit and display unit. Needs for re-calibration after tyre change or inflation depends on system; System Relearn Procedure given by vehicle manufacturer or system provider must be followed after tyre service is done.

Different hardware concepts are offered in the market:

A) Sensor attached to the valve:

For **passenger car applications** there are two type of valves: rubberized snap-in and metal clamp-in types. The complete TPMS Service Kit (valve based, whatever type) must be employed each time the tyre is renewed, or sensor is removed. Complete replacement is necessary in case of mechanical damage, accident or after the use of liquid sealant.

For **commercial vehicle applications**, usually sensor is fixed on valve base with M6 thread, see below some recommendations:

1. If a TPMS valve is mounted on rim before assembly of sensor through the screw, threaded hole in valve base shall be clean from any kind of contamination.
2. Clean screw, hole and thread before TPMS mounting.
3. Use only screw type indicated by sensor manufacturer or original parts, general-purpose screw must be avoided.
4. Use calibrated screwdriver to install sensor screw. In case of requested torque over 5 Nm it is recommended to consult valve manufacturer.
5. Tightening torque of valve nut is indicated by valve manufacturer and may not be equal to standard non-TPMS valve due to presence of inner thread which reduces valve resistance. As a consequence it is recommended to verify the valve torque.
6. Any means of friction reduction (e.g. washer, lubricant..) shall be allowed by the rim and valve manufacturer.

• Tyre dismounting/mounting

In order to ensure faultless mounting and dismounting and to avoid damages on sensors, it is mandatory to follow the recommended mounting procedure and to use appropriate tools. Avoid any contact between sensor housing and tyre bead during mounting/dismounting procedures to prevent possible damages, these operations shall be assigned to trained operators. For rubberized snap-in valves a protrusion on rubber body (see ETRTO Standard Manual – chapter 12.3.5) may underline the presence of sensor within the tyre. TPMS valves used in commercial vehicle applications may have a special marking on the external part of the valve below the nose thread.

• Valve Cores

It is mandatory to use only the appropriate replacement valve core. For metal aluminium clamp-in valves, the use of inappropriate valve cores (e.g. plain brass valve core or similar) may result in an electrochemical reaction which could cause the valve core to fail. Only use original replacement parts (nickel plated valve cores). For rubberized snap-in valves or brass clamp-in valves, yellow brass cores are allowed. The proper torque setting must be applied to the valve core as defined by the original sensor TPMS kit supplier. A custom designed torque tool with torque limitation to tighten the valve core is strongly recommended (in particular for metal clamp-in valves).

• Valve Stem

Metal clamp-in valves:

In some cases unscrewing of the valve securing nut is equivalent to a complete disassembly of the TPMS system. In case of tyre renewal it's strongly recommended the substitution of worn parts (i.e. sealings, and core) or, in case of damages, the substitution of complete valve and nut following TPMS kit manual with OEM approved components. Always make sure that caps are installed on valve stems. These caps protect the valve stem and valve core from contamination. To tighten the nut, it's mandatory the application of screwing torque defined by valve manufacturer, using always calibrated screwdriver. It's recommended to avoid any scratches on nut or valve coating to prevent corrosion issues. Avoid additional nut tightening during usage to prevent over-stresses on valve.

Rubberized snap-in valves:

In case of tyre renewal it's mandatory the substitution of whole valve. The mounting into the rim has to be done in according to TPMS kit recommendations by skilled operators. Always make sure that caps are installed on valve stems. Valve caps protect the valve stem and valve core from contamination. Both metal and plastic caps can be used on yellow brass valve stem.

• Valve adaptors and extensions

It is mandatory to use only adaptors or extensions approved by valve and rim manufacturer in particular for rubberized valves. Follow instructions of valve manufacturer for screwing torque and clamping elements, the stability and integrity of extensions shall be periodically verified.

• TPMS screw assembly

Follow the application-specific torque instructions and use calibrated torque wrench to attach the sensor to valve stem when screw is needed. Due to risk of damaging the system, it is recommended to not exceed the maximum defined torque by the manufacturer.

• Nut Torque (for metal clamp-in valves)

Follow the application-specific torque instructions and use calibrated torque wrench with multiple face sockets. The usage of excessive torque could damage the valve stem, leading to immediate and/or premature failure and subsequent required stem or complete sensor replacement. It's recommended to avoid any scratches to prevent corrosion issues.

• Workshop / service dealer care of the TPMS

Trained people and equipped service stations should carry out tyre fitment, replacement and service of the sensors and service components. At tyre renewal or substitution, TPMS valve system and nearby area has to be verified: in case of corrosion of the rim hole refer to wheel producer manual; when installing a new valve, it's recommended the cleaning of valve mating surface of the rim without generating scratches on rim coating. Follow the service instructions of TPMS kit manufacturer, in particular for control and substitution of parts/component during usage. Refer to valve or TPMS or rim or vehicle manufacturer to identify the most suitable valve

for a specific rim. It's recommended to use calibrated and certified tyre pressure gauges. The usage of lubricant or chemical agents on valve or rim or TPMS is allowed only if specifically indicated by valve or rim or TPMS manufacturers. For storage, follow recommendations of valve or TPMS manufacturer.

B) Sensor fixed on valve nose

Any added weight on the valve mouth or on the valve cap can expose the valve to non-expected additional stress. It is recommended not to add any additional weight without valve manufacturer acceptance. In order to ensure faultless mounting and dismounting and to avoid damages on sensors, it is mandatory to follow the recommended mounting procedure of TPMS manufacturer and to use appropriate tools, in particular for screwing process. The presence of existing extension will interfere with TPMS. For CTIS (Central Tyre Inflation System) used on commercial vehicle or agricultural vehicle applications, the same indications apply.

C) Sensor fixed inside tyre on the inner-liner:

• Dismounting/Mounting:

Installation may only be carried out by appropriately qualified personnel. Follow the manufacturer's instruction regarding the appropriate sensor position, pretreatment of the bonding surfaces on tyre inner-liner and rubber container and for inserting the integrated sensor. Before the tyre is fitted on the rim, a function check of the tyre sensor has to be carried out (procedure outlined in manufacturer instructions). It is recommended positioning the sensor away from the valve preferably at 180°. In terms of assembly, disassembly and balancing there is no difference between tyres equipped with sensors fixed on the inner-liner or tyres without. Tyres with sensors can be disposed of following the same process as defined for standard tyres. However, the sensor must be removed from the tyre and disposed of according to the local legislation. It is to be considered that there can be an internal battery. Regarding retread ability, follow the manufacturer recommendations as to whether the sensor can remain in tyre or not or which retreading process has no effect.

• Storage:

There is no difference in the storage requirements of tyres equipped with sensors fixed on the inner-liner and those without sensors. However greater attention should be applied to prevent tyre deformation in the area where the sensor is fixed. Prevent the formation of condensation and / or the introduction of liquids or foreign material inside the tyre. For this reason it is not advisable to use products for balancing the tyre that employ substances / masses inside.

E.T.R.T.O. Recommendations on cone of projection of tyre rim/wheel assembly

The air pressure contained in a tyre is dangerous. The sudden release of this pressure by a tyre blow-out or side ring separation can cause serious injury or death. Stay out of the trajectory as indicated by the shaded area (grey and orange) depicted in the below graphics. When installing the tyre rim/wheel assembly on the vehicle, it will be impossible to stay out of the trajectory, should be kept as short as possible in time. However, at all other times you and all others must stay out of the trajectory. It is recommended to keep the inflation pressure as low as possible when installing the tyre/rim assembly in the vehicle, once installed inflate the tyre at the required inflation pressure staying away of the cone of projection.

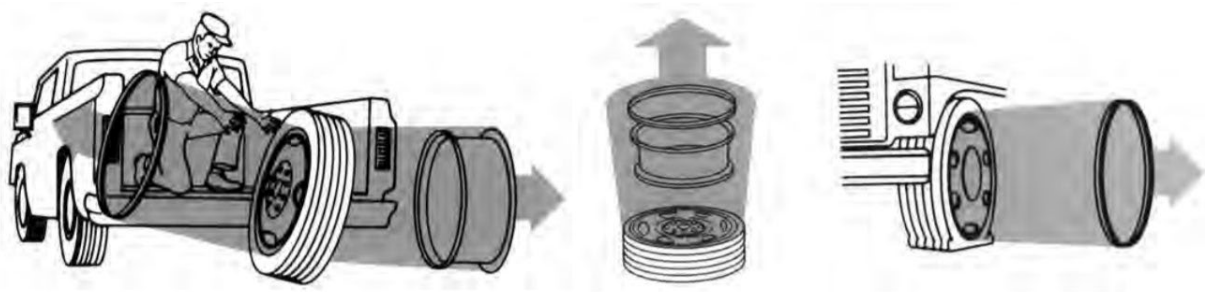

NOTE: Under some circumstances, the trajectory may deviate from its expected path.

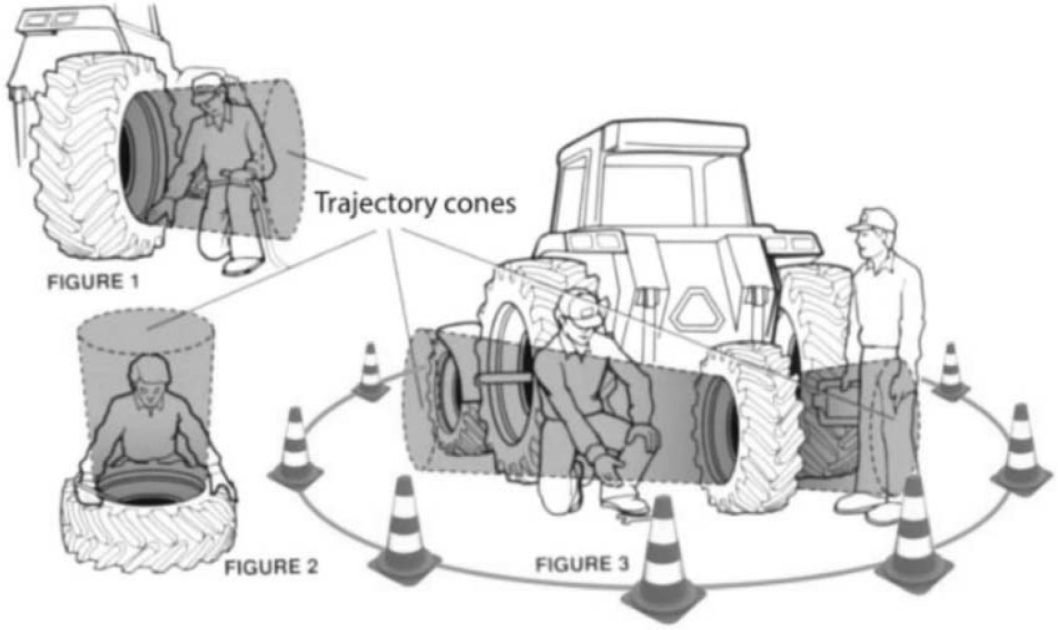

Care and maintenance

Tyre fitting and removal

These operations must be entrusted only to a specialist who has the necessary equipment and expertise. Inexpert fitment can result in personal injury and visible or concealed damage to tyres and wheels.

In addition to the technical standards in the E.T.R.T.O. Standards Manual and the instructions given by tyre, rim and valve manufacturers in their technical publications, E.T.R.T.O. recommends the following :

- **Fitting**
  - Ensure that the rim is approved for the tyre size being fitted.
    Clean the wheel thoroughly to remove all contamination (dirt, grease, rust, fitting lubricant, etc.). Inspect the wheel carefully. If it is cracked or deformed, it must be replaced. Do not mount tyres on rims showing any sharp edges or burring around the bead seating area to avoid any tyre damage.
  - Check carefully the condition of the valve hole. The edge of the valve hole on the tyre side of the rim must be rounded and smooth, while on the weather side the edge must be free from any burrs that can damage the valve stem.
  - Lubricate the tyre beads with an approved proprietary tyre lubricant only. This applies especially to tubeless tyres which are mounted on rims with safety humps. If this recommendation is not followed, bead damage or fracture during fitting could occur.
    Note :The use of hydrocarbons is prohibited.
  - With the tyre on the rim, start the inflation making certain that the beads are seating correctly on the rim seat. After inflation ensure that the beads are correctly located against the rim flange.
    Non-compliance with this procedure can result in tyre failure in service.
  - Ensure that the air line between the tyre valve and the pressure gauge is long enough to enable the fitter to stand clear of any danger from flying fragments in the event of a tyre or wheel burst.
    It is sometimes necessary, in order to respect the above fitting instructions, to use a pressure greater than the normal recommended maximum pressure. For obvious safety reasons tyre and rim manufacturers should be consulted in order to determine the permissible maximum fitting pressure.
    In the case of passenger car tyres it is also recommended that only installations appropriate for this type of tyre should be used.

- Always fit an inner tube with spoked wheels because this type of wheel is rarely completely airtight.
  For safety reasons always use a new tube when fitting a new tube type tyre and a new tubeless valve when fitting a new tubeless tyre. Where no tubeless marking appears on the tyre sidewalls, tyres are intended for fitment with an appropriate inner tube.
- All tubeless tyres must be fitted on air-tight rims.
  Tubeless radial tyres must be fitted only on rims with profiles designed for bead retention.
- As practice varies widely from country to country with regard to the fitting of an inner tube in tubeless tyres, national recommendations (e.g. TNPF) are explaining in details the precautions to be taken when fitting an inner-tube in tubeless tyres. In all cases the tyre manufacturer must be consulted.

- **Removal**
  - Before starting to remove a tyre, check that there is no danger of the tyre bursting due to damage (cuts, bulges, exposed cords, etc.).
  - To avoid danger when separating the beads from the rim, unscrew and remove the valve insert before removing the tyre in order to ensure complete deflation.

Snap-in valves must be replaced every time a tyre is replaced. In case of valves with sealing grommets, the grommet must be replaced every time a tyre is replaced.
Fitting and removal of tyres must be entrusted only to specialists who should scrupulously follow the instructions given by the tyre and vehicle manufacturers.

In case the Drop Centre well is not centered on the rim profile, then the mounting and dismounting has to be done from the side closest to the drop centre well. In case of doubts on the mounting and/or dismounting side, the wheel/rim manufacturer should be consulted.

Specific additional recommendations for tyre fitting and removal on a flexible wheel (J-FL rim contour)

- **Tyre fitting**

When assembling a tyre on a flexible wheel, it is necessary to push the tyre (with the bead pusher, see illustration) about 3 cm deeper compared to a normal wheel to guarantee the tyre mounting diagonal distance.

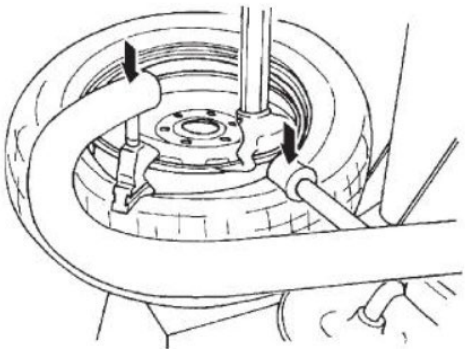

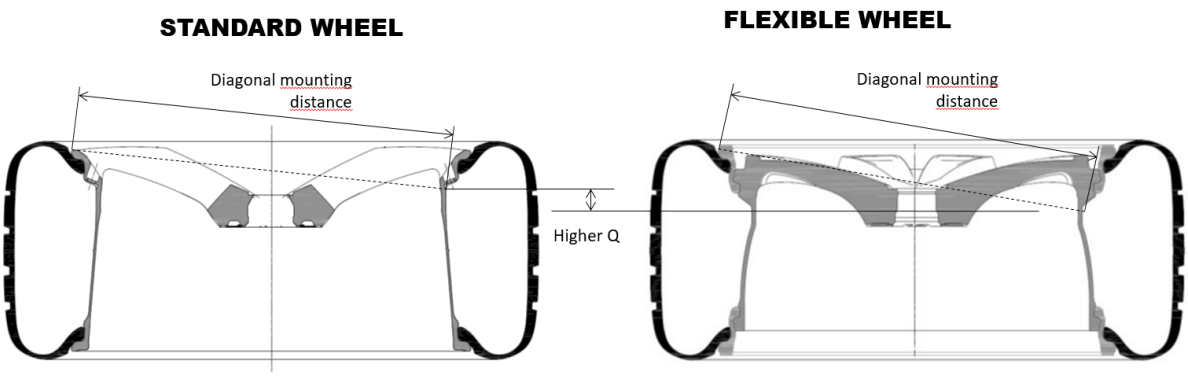

Every time a tyre is replaced, the flexible wheel flanges, metal body and tyre must be checked for abnormal wear or damage.
The flexible flanges should be lubricated, as well as the tyre beads, using an approved proprietary tyre lubricant only.

Balance weights must be glued on the metallic part only. They shall not be glued on the flexible flanges.

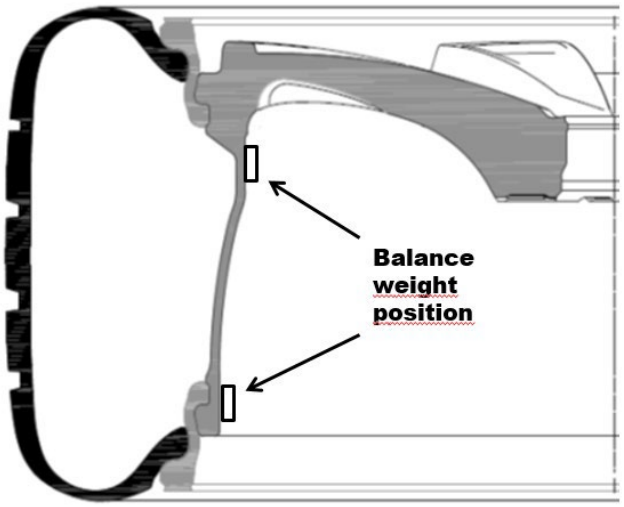

The assembly of run-flat, extended mobility, C-type or CP-type tyres is not allowed on flexible wheels.
It is not allowed to:

- disassemble and/or re-assemble the flexible wheel flanges
- assemble a tyre directly on the metal body/metal center part.

- **Tyre removal**

To push the tyre out of the tyre seats, it is necessary to push on the tyre itself (see illustration). It is not allowed to push on the Flexible Wheel flanges.

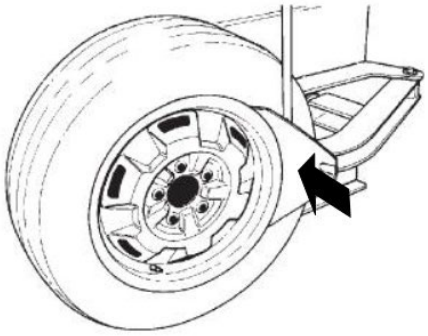

When disassembling the tyre, the tyre may stick to the flexible wheel flanges. It is advised to spray a lubricant between the bead and the rim, after having deflated the tyre, and to give it about 5 minutes to progress inside the area where the sticking occurs.
It is not allowed to use a tool that could damage the flexible wheel flange.

Inflation pressure

These recommendations are specific to Passenger Cars tyres.
Items which are common to all products are referred into the General Section and must be considered too.

The cold pressures recommended by tyre manufacturers in their technical documents should be regarded as minima. This information is available in the vehicle manual, and is usually indicated on the driver door frame and/or on the fuel tank flap. In the absence of these, one can refer to tyre manufacturers published load/pressure tables.
For special cases higher pressures may be recommended by car or tyre manufacturers in their technical publications.

E.T.R.T.O. recommends that :

- When different pressures are recommended for the axles of a car (the tyres on a given axle should always have the same pressure), the pressure of the spare tyre, if of the same type, should be at least 30 kPa (0.3 bar) greater than the higher recommended pressure and be re-adjusted to the correct pressure when fitted on the car.
  For spare tyre/wheel assemblies of a different type to those already mounted on the car, consult the tyre manufacturer.

- When the car is subjected to hard driving conditions (e.g. sustained high speed, towing a trailer or caravan etc.), it is recommended that cold inflation pressure be increased by between 20 and 50kPa while respecting the maximum inflation pressure of the tyre (320kPa for sizes having a Speed Symbol up to T, 350kPa for sizes having a Speed Symbol H, V, W or Y, Reinforced Tyres and ZR marked tyres) and unless specific guidance is given in the vehicle handbook
- For vehicles in off road service it is sometimes recommended to use air pressures below those for on road service. The air pressure must be readjusted to the normal on road value as recommended from vehicle manufacturer when returning to normal on road use.
- A tyre pressure monitoring system (TPMS) is an additional tool to reduce the under-inflation of the tyres in practical use. The correct choice of warning thresholds helps to keep the inflation pressure at the required level for optimum performance criteria and reduce fuel consumption / CO2 emissions. Any kind of TPMS does not exonerate the driver from regular pressure checks. In particular, if the inflation pressure at the point of illumination of the telltale is below the pressure required to carry the load of the vehicle according to tyre industry standards, the vehicle manufacturer must advise the customer that he/she still needs to check the tyre pressure regularly.

Tyre load and speed

Most tyres are marked with a Service Description comprising a Load Index (number associated with maximum load that the tyre can carry) and a Speed Symbol (letter associated with the maximum speed capability of the tyre) e.g. 91V. Tyres fitted as original equipment are suitable for the maximum axle weight and speed capability of the car.

Speed Symbol	P	Q	R	S	T	H	V	W	Y
Maximum Speed (km/h)	150	160	170	180	190	210	240	270	300

How to read the information marked on the tyre

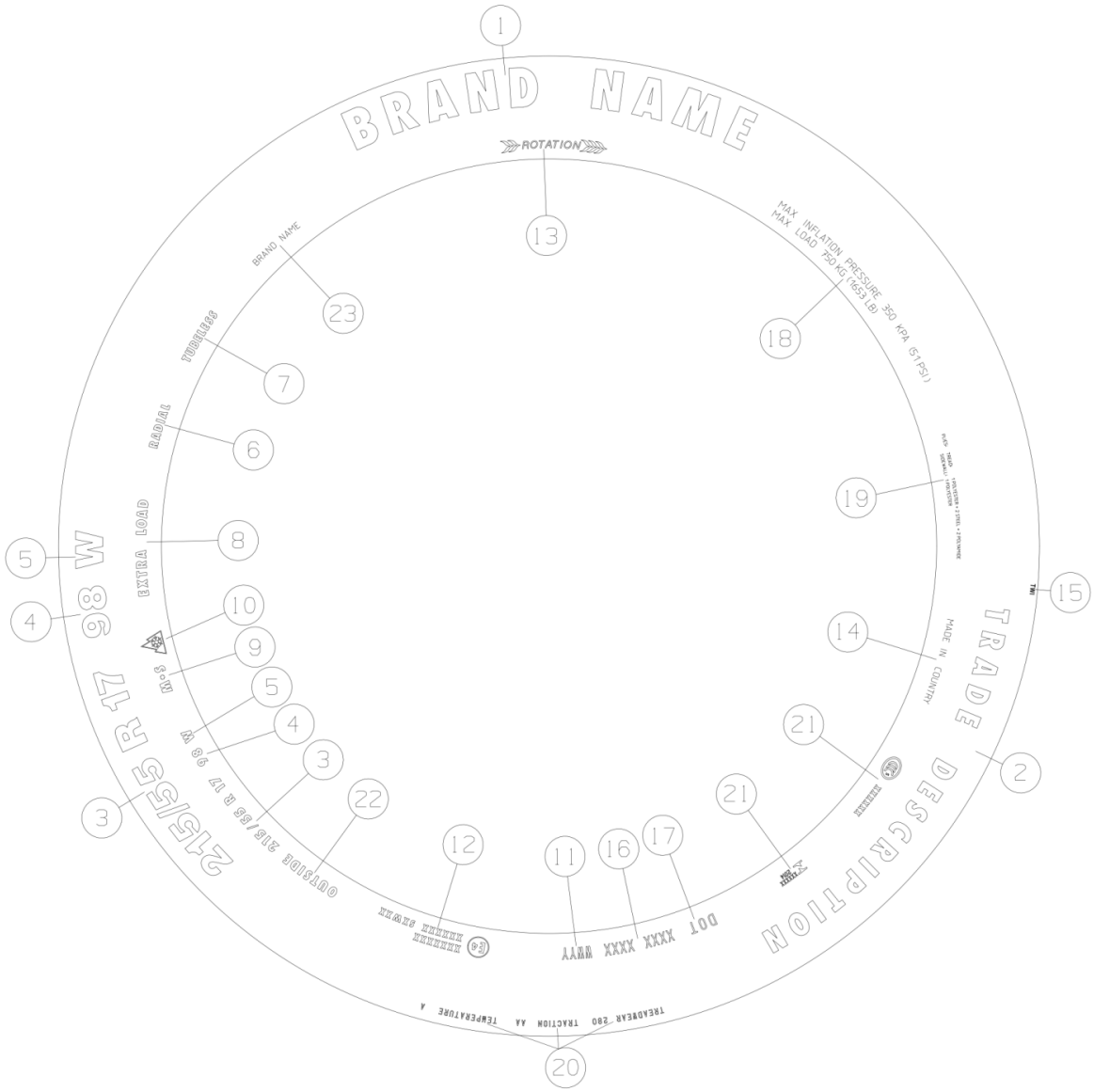

1. Manufacturer’s name or brand name
2. Commercial name
3. Tyre size
4. Load index
5. Speed Symbol
6. Structure
7. It indicates tubeless or tube type tyres (*)
8. Extra Load or Reinforced marking (*)
9. Mud and Snow marking (*)
10. It indicates tyres designed for use in severe snow conditions (*)

11. Production Date Week/Year
12. UNECE Type Approval mark and numbers
13. Directional arrow marking (*) (^)
14. Country of origin
15. It indicates the position of the tread wear indicators
16. Tyre Identification Number (consisting of Plant Code, Size Code and Type Code) (**)
17. Symbol indicating compliance with the requirements of the US Dept. of Transportation (**)
18. It indicates maximum inflation pressure and maximum load capacity (**)
19. It indicates numbers and materials of reinforcement layers (**)
20. Uniform Tyre Quality Grading values (**)
21. Compliance marks of national regulations (*)

(*) Where applicable
(**) optional, only mandatory in countries where compliance with the FMVS standards is required
(^) It indicates the direction of rotation of the tyre recommended by the manufacturer.

The above sketch is given as an example only. All legal requirements must be taken into account.

Tyre storage

See pages 12 to 13.

Wheels

The condition of the wheels should be checked regularly, particularly for distortion of flanges and the wheel disc. In the event of wear/damage to rim flanges, it is recommended that all sharp edges be removed in order to avoid tyre damage during fitting and use.

Wheels damaged or distorted, or having cracked or deformed stud hole seatings , must not be repaired or used.

- **Wheel covers**
  When it is foreseen to attach a wheel cover, this shall have:
  - an overall diameter which does not exceed the outer diameter of the rim flange,
  - a fixing system such as to retain the cover onto the wheel and prevent it to rotate, also at the top performances of the vehicle, and
  - an appropriate aperture so as to leave a sufficient clearance for the valve and permit free access to it for inflating and pressure checking.

  The correct fitting of the cover unto the wheel shall be regularly checked to ensure that it is properly and tightly seated and it does not interfere with the valve, especially in case of rubber covered valves.

  Incorrect fitting of wheel covers or fitting of wheel covers with inappropriate dimensions can damage the valve and the tyre.

Tyre damage

Tyre damage should not be neglected.
If damage such as a blister, rupture, or cut exposing the casing is visible on a tyre, or if it has suffered a violent impact (for example against a kerb) such that there has been a risk of internal damage, it must be removed and examined by a tyre specialist as soon as possible to determine whether it is repairable even though it appears to be sound.
If a repair to a tyre is necessary and possible, it must be made as soon as possible after the damage occurs in order to avoid further deterioration of the tyre structure.
All tyre repairs must be entrusted to an expert who must then take full responsibility for them.

Tyre minimum tread depth

The tread of a tyre is provided with a raised pattern, or sculpture, the main purpose of which is to ensure maximum tyre grip on wet or slippery roads. In addition to the features of the pattern itself, tyre construction, the chemical composition of the tread, road surface, weather conditions, mechanical features of the car, driving style and particularly speed, are all important factors affecting tyre/road adhesion. Tread depth is not the principal factor in tyre adhesion.
All these factors, particularly the factors not dependent on the tyre itself, make it practically impossible to define precisely the minimum tread depth compatible with safety. For instance, in pouring rain, on a smooth 'heavy traffic' road, the fast car driver should drive with the utmost care even if his car is fitted with new tyres. All that can be stated is that for a particular tyre under given conditions, road grip progressively decreases with tyre wear. The driver should allow for this fact and reduce speed on wet roads accordingly.

> *E.T.R.T.O. considers that it is impossible to specify a minimum tread depth which would be valid for all types of tyres beyond which further use becomes dangerous. Modern tyres have tread wear indicators (normally 1.6 mm) to warn the user that the tyre is approaching the limit of wear.*
> *Drivers should not assume that they can drive safely in wet conditions without reducing speed merely because the tyres have not yet reached a stage where they should be changed. In particular, drivers should take care to replace their tyres in good time bearing in mind the car's performance capability. The shallower the tread, the higher the risk of skidding on wet roads.*

The achievable mileage of tyres can be optimized by even wear. Follow tyre or vehicle manufacturer's recommandations for rotating the tyres.

Tyre grooving and siping

- **Supplementary grooving or siping**
  This operation consists of cutting additional grooves or knife cuts (sipes) in a tyre tread not deeper than the original tread pattern, usually in a transverse or diagonal sense,
  Such grooving or siping operation requires tyre manufacturer approval.

This operation must be carried-out by specialists on their own responsibility taking into account the instructions given by tyre manufacturers in their technical publications.

- **Regrooving or recutting**
  Regrooving or recutting consists of cutting a pattern in the base of the tread, deeper than the original pattern, to prolong mileage performance.
  Such regrooving or recutting operation is not recommended but if carried out it is under the entire responsibility of the specialist who performs the operation.
  Note: In some countries this operation is forbidden by the law, therefore national legislation must be checked before considering to make it.

Tyre repair and retreading

In the course of its life a tyre is subjected to an enormous amount of abuse and can be damaged in many ways. It is imperative that the work of repairing or retreading them is entrusted only to competent companies. After a careful examination by a specialist to decide whether repair or retreading is possible, these companies must take total responsibility for the examination and the work carried-out on the tyre.

Tyre ageing

Tyres fitted to vehicles such as caravans and boat trailers which are parked for long periods will tend to age and crack more quickly than those which are used and run frequently. In such circumstances it is important to jack the weight off the tyres and to cover them so that they are protected from direct light.
Particular attention must be paid to spare tyres which may be old or aged in which case they should be used with caution and be replaced as soon as possible.
In addition to this recommendation, see also general recommendation in the “Tyre ageing” chapter at page 15.

Tyre/rim combinations

For approved tyre/rim combinations, consult the current E.T.R.T.O. Standards Manual. For other tyre/rim combinations, for existing vehicles, consult the E.T.R.T.O. Engineering Design Information and the tyre and rim manufacturers concerned.
Consult rim and wheel manufacturers for confirmation of the strength of the rim/wheel for the intended service.

Selection of replacement tyres

General

Every car has well defined mechanical and load/speed characteristics and the choice of tyres for it is governed largely by these factors.
Only car and tyre manufacturers are competent technically to make this choice. In particular, tyre manufacturers have extensive facilities, in both equipment and personnel, for carrying out research and development over the full range of operating conditions.

The tyres fitted to your vehicle as original equipment were selected by the vehicle and tyre manufacturers taking into account all aspects of the vehicle's operation. Changes in tyre size, structure, load and speed rating should not be made without first seeking advice from the tyre or vehicle manufacturer as the effect on safety, car behaviour and clearances must be considered.

Therefore, when replacing tyres, it is essential to fit either the size and type identical to those fitted on the car originally, or the alternatives recommended by tyre manufacturers in their official literature.

Replacement tyres must have a Load Index and a Speed Symbol (i.e. the Service Description) at least equal to those of the original tyres (unless lower codes are specified in the vehicles registration document and/or in the vehicle maintenance and service manual). Exceptions are 'M+S' tyres with '3PMSF' marking and tyres with "POR" marking, in which case the Speed Symbol of replacement tyres can be lower than that of the original tyres, but the driving speed must be restricted to the lower speed capability and a maximum speed warning label, specifying the lowest value of the maximum speed capability of the fitted tyres, shall be displayed inside the vehicle in a prominent position readily and permanently visible to the driver.

N.B. Tyres for speeds over 240 km/h may be marked with both "ZR" and the relevant service description (e.g. 195/50 ZR 15 82 W, 195/50 ZR 15 82Y) to specify the tyre performances.

If they are suitable for speeds over 300 km/h, they are marked with "ZR" and the Service Description is marked within brackets, e.g. 195/50ZR15(82Y). For safety reasons a new tube must always be used when fitting a new tube type tyre and a new tubeless valve when fitting a new tubeless tyre. In the absence of service description, consult the tyre manufacturer for actual maximum speed and load carrying capacity allowed to the "ZR" tyre.
Used tyres should not be fitted if their previous history is unknown. It is essential always to obtain expert advice from tyre manufacturers or tyre specialists regarding tyre replacement (see ETRTO Recommendations on Used Tyres).
When the replacement of all 4 tyres at the same time is not practical, then both tyres on the same axle should be replaced. When only one axle set of tyres is replaced, then it is recommended to install the new tyres on the rear axle. The less worn tyres will offer more grip,

which helps maintain control on the rear axle. Loss of grip on the rear axle is a situation called oversteer that makes the vehicle very difficult to control for typical drivers.
In some cases, the vehicle manufacturer may specifically advise against replacing less than all four tyres. Always check and follow the recommendations in the vehicle owner's manual. For 4WD and AWD vehicles, even small differences in outside diameter may cause drive train damage or mechanical malfunction.

Mixed fitments

All movements of the steering wheel when driving a vehicle produce lateral forces which the tyres have to withstand. The reaction of a tyre to these lateral forces varies according to its structure. Therefore, for interchangeability of tyres without modification of the handling characteristics of the vehicle, it is necessary to take into account their type of construction - radial, diagonal or bias belted.

Except in the case where a temporary-use spare is fitted all the tyres on the vehicle must be of the same structure. Except in the case where a temporary-use spare is fitted, the tyres on a given axle must be of the same make, size, structure (radial, bias or bias-belted), and category of use (normal, snow or special use) and with approximately the same degree of tread wear.

It should be clearly understood that, notwithstanding the technical recommendations above, users must also comply with their national legislation.

Tyres marked with a prefix "P"

e.g. P195/70 R 13 and tyres marked 195/70 R 13 are almost identical in size and can be mixed on a vehicle <u>but not on the same axle</u> providing the load and speed capabilities are the same and both P-metric and metric sizes are listed in the vehicle type approval certificate.

M+S tyres

Taking into account the whole range of conditions encountered in winter, the user's choice of tyres is based on many factors – geographical location, length and frequency of journeys, local legal requirements, etc. – in the knowledge that optimum vehicle handling is obtained from the fitment of four tyres of the same type.
Tyre manufacturers provide tyres marked M+S for essentially all winter conditions, but they can be classified broadly into three main types, namely M+S tyres without 3PMSF (i.e **3 P**eak **M**ountain with **S**now **F**lake) marking, M+S tyres with 3PMSF marking and studded M+S tyres.

- **M+S tyres without 3PMSF marking**

  These tyres (without studs) are effective in most conditions (that is in presence of snow, melting snow, mud, slush, ice, cold rain, winter temperatures even if it is above 0°C). However, they do not always reach the standard of studded tyres on melting ice nor the standard of M&S tyres with 3PMSF marking on severe snow conditions. In general, the design of these tyres (structure, tread pattern and compounds) gives adequate performance in general winter conditions and they are not subject to the legal constraints

of studded tyres as they can also be used in normal (non-winter) conditions.

- **M+S tyres with 3PMSF marking**

  These tyres are designed for use on severe snow conditions and exceed the minimum performance on snow required by the UN ECE Regulation 117 for bearing the 3PMSF marking.

  3 Peak Mountain with Snow Flake (3PMSF) sidewall marking **of snow tyres for use in severe snow conditions.**

  Minimum 15 mm base and 15 mm height, placed adjacent to the M+S marking.
  Above drawing not to scale.

Use of M+S tyres with or without 3PMSF marking is regulated in several countries. Always make sure to have your vehicle fitment meeting the regulatory requirements of the regions where you drive.
The fitment of four M+S tyres is recommended.
The tyre manufacturer's advice on fitment should be followed and the same direction of rotation should be maintained from one winter to the next.
In addition, M+S tyres with or without 3PMSF marking should be run-in by avoiding harsh acceleration or cornering or sudden braking for some hundred kilometres (i.e. at least 100 kilometers).
The maximum speed corresponding to the Speed Symbol on the tyre should not be exceeded even if the vehicle is capable of a higher speed.
In the European Union the UN Regulation 142 applies and it allows to fit M+S tyres with 3PMSF marking which have a speed symbol lower than the one required for the car but the speed symbol cannot be less than Q. In that case a sticker specifying the maximum speed capability of the fitted snow tyres, shall be displayed inside the vehicle in a prominent position readily and permanently visible to the driver.

- **Studded M+S tyres**

  The studs are inserted into holes provided for them in the tread. Some countries regulate their use legally, particularly with regard to the period of use, speed limits and the disposition of studs (number, position and protrusion).
  E.T.R.T.O. recommends that :

- New studded tyres should be run in for approximately 300 km at a moderate speed.
- When a car is equipped with studded tyres, all running wheels should be fitted and this is also mandatory required by some countries. In fact, studded tyres on only one axle can cause instability - for example on braking when decelerating on icy roads - particularly on front-driven cars with studded tyres on the front axle only. Similarly instability, particularly on bends, can occur on rear driven cars equipped with studded tyres on the rear axle only.
- Heavy braking and rapid acceleration should be avoided on studded tyres.
- Studded tyres, when re-fitted after a period of disuse, should be mounted so as to turn in the same direction as when previously fitted. At the end of the winter season therefore, the direction of rotation or the wheel position should be marked on each tyre.
- In absence of national legislation, a speed of 100 km/h should not be exceeded on roads free of snow and ice because of reduced road grip of studs being considerably affected by speed, acceleration and sharp braking.

Use of “summer” tyres at very low ambient temperature

Tyres commercialized by manufacturers as “summer” tyres feature tread compounds designed to provide optimized levels of grip at positive Celsius temperatures.
Such tread compounds are however very sensitive to temperature and damage may occur if “summer” tyres are used at very low ambient temperatures when the compounds of “summer” tyres may lose their elasticity and become brittle (reaching the so-called glass transition point). When this occurs and the tyre is flexed, the tread compound may crack.
Therefore, it is recommended not to use “summer” tyres at very low ambient temperatures (as rule of thumb at temperatures lower than -20°C unless specified differently by the tyre manufacturer).
In case of tyres subject to transportation at very low ambient temperatures, special attention must be taken when unloading the vehicle; in this case it is recommended to avoid manoeuvres generating strong deformations of the tyre unless it is possible to raise the temperature of the tyre before unloading.
Tyres commercialized by the manufacturer as “all-season” or “winter” tyres are not in scope of this recommendation; tyre manufacturer must be consulted for specific recommendations.

Downgraded tyres

It is recommended that downgraded tyres be marked with the following inscription:

DA

There is no restriction on the use of tyres marked ‘DA’.
Tyres marked ‘DA’ (on at least one sidewall) have been downgraded by tyre manufacturers for various minor reasons of their own which in no way affects their use - for example, superficial blemishes, minor geometrical imperfections, etc..
The location of the marking ‘DA’ is left to the discretion of the tyre manufacturer.

Asymmetric and Directional tyres

Tyre tread designs can be classified into three main categories:

— Symmetric;

— Asymmetric;

— Directional.

The tyre manufacturer determines the category for each new tread design based on its intended performance characteristics.

The tyres with symmetric tread design are the most common, they have a pattern where both halves of the contact patch are identical. This means the tyre can be fitted on the vehicle in any orientation without affecting performance. These tyres typically do not require any special sidewall marking.

Instead, the tyres with asymmetric or directional tread design, commonly named “ “Asymmetric tyres” and Directional tyres”, must be fitted on the vehicle with a specific orientation to assure their optimal performance and therefore requires a specific sidewall marking.

1. Asymmetric tyres

An asymmetric tyre features different designs on the inner and outer sides of the tread, each optimized for specific performance goals:

— The outer side typically has larger, stiffer tread blocks for cornering and dry handling.

— The inner side usually has more grooves and sipes for water evacuation, wet grip, and braking.

The asymmetric tyres are marked on the sidewall to indicate proper fitment. The most common markings are:

- INSIDE / OUTSIDE
- INNERSIDE / OUTERSIDE

Some tyres may also be marked INNERSIDE only (with the other side assumed outward).
The correct fitment ensures an optimal performance.

In the case of a vehicle equipped with a spare wheel assembly fitted with an asymmetric tyre, this spare wheel assembly will always run with the proper inside/outside when fitted to both sides of the vehicle.
Installing an asymmetrical tire with a reversed tread pattern is not recommended and should not be considered. Using an asymmetrical tire with a reversed tread pattern will compromise overall performance and may lead to uneven tyre wear and/or increased interior noise and increased vibration levels.
E.T.R.T.O. further recommends that all tyre manufacturers indicate the correct fitment of asymmetric tyres with a clear marking on the sidewall, and include a clear statement in their technical literature stating that the use of the tyre in the opposite orientation should not be considered. It should be clearly understood that, notwithstanding the technical recommendations above, the use of asymmetric tyres must also comply with the relevant national legislation.

2. Directional tyres

A directional tyre is a tyre that the manufacturer recommends to be used in one direction of rotation. Tyres featuring a V-shaped tread pattern are the most common example of directional tyres. The direction of rotation is generally identified by a directional arrow with the eventual addition of the word “ROTATION” on the tyre sidewall (others wordings like “DIRECTION” or “ROTATE” are sometime used as an alternative).
In the case of a vehicle equipped with a spare wheel assembly fitted with a directional tyre, this spare wheel assembly will run in the proper direction only when fitted to one side of the vehicle.
The fitting of a directional tyre in the opposite direction does not constitute an unsafe condition. Although the tyre is then not fitted as recommended, vehicle overall performance and handling will not be compromised. Nevertheless, the use of a directional tyre in the opposite direction should be discouraged and should be considered as a temporary measure only. Continued use of a directional tyre in the opposite direction may lead to uneven tyre wear and/or increased interior noise and increased vibration levels.
E.T.R.T.O. further recommends that all tyre manufacturers indicate the preferred direction of rotation on directional tyres with a clear arrow marking on the sidewall of the tyre, and include a clear statement in their technical literature stating that the use of the tyre in the opposite direction should only be considered as a temporary measure.
It should be clearly understood that, notwithstanding the technical recommendations above, the use of directional tyres must also comply with the relevant national legislation.

Tyres with run flat capability

Several technologies are available today to provide passenger car tyres with flat running mode capability following a loss of air. The driver can continue travelling for a limited distance at a limited speed, but without needing to stop and perform any action, until a safe place can be

found to service the deflated tyre.
Tyres with run flat capability are the followings:

1. SST (Self Supporting Tyres also known as Run Flat Tyres) are generally identified by a specific structure or construction code (for example: ‘RF’ instead of ‘R’).
   SST are run flat tyres approved as such pursuant the UN regulation 30 and are identified by the RF construction code inside the size designation (e.g. 245/40 RF18) and the below reported specific symbol marked on the sidewall.

2. EMT (i.e. Extended Mobility Tyres) are radial tyres approved as such pursuant UN regulation 30 and are identified by the below reported specific symbol marked on the sidewall.

3. Beside SST and EMT, some radial tyres can provide flat running mode capabilities and are simply identified as such by tyre manufacturers specific markings which can be retrieved in the websites and catalogues of the manufacturers.

Repairing

Tyres with run flat capability have specific internal construction which enable them to perform even when deflated, for a limited distance and at a restricted speed. The distance permitted under these conditions may vary according to the tyre or vehicle manufacturer concerned.
In the course of running in a totally deflated or significantly under-inflated condition, the tyre's internal construction is subjected to high stresses and hence may become weakened and permanently damaged rendering the tyre unsuitable for repair.
Since each tyre is different, and different brands of tyres use different technical solutions to provide run flat capability, each individual tyre manufacturer determines the repairability of its own tyres with run flat capability.

Consumers are urged to check with tyre specialists on the repair guidelines for each brand of tyre with run flat capability.

Retreading

The responsibility for retreading any tyre lies with the retread manufacturer and not with the original tyre manufacturer.
Given the unique construction of tyres with run flat capability, it must never be mixed on a vehicle with a standard tyre.
To avoid this risk, a retreaded tyre with run flat capability should be clearly identified and sold by the retreader as tyre with run flat capability and not as a standard radial tyre.

Retro fitting

Any vehicles equipped with a Tyre Pressure Monitoring System (TPMS) which provides a warning signal to the driver in case of serious under-inflation of any of the tyres can be fitted with radial tyres with run flat capability. However, in case of SST tyres, the vehicle manufacturer has to be consulted regarding the possibility of SST fitment as SST tyres may only be fitted to vehicles equipped with a TPMS and specifically designed for being equipped with these tyres. The TPMS is necessary when fitting tyres with run flat capability because the self supporting nature of these tyres makes it difficult for the driver to know when air pressure has been lost, and could result in an unsafe condition if the vehicle speed is not reduced.

Replacement tyre fitment

The retro fitting of conventional tyres to vehicles originally fitted with tyres with run flat capability will remove the vehicle's run flat capability, potentially leaving the driver immobile in the case of a puncture. In addition, using non-SST tyres on a vehicle designed for SST tyres could adversely alter the handling characteristics of the vehicle. It is therefore recommended to consult with the vehicle manufacturer before replacing SST tyres with radial tyres with or without run flat capability on such vehicles.

Mixing tyres with run flat capability with standard radial tyres

The handling and performance characteristics of tyres with run flat capability may be different from those of conventional tyres, and so they must not be intermixed on a vehicle. All four tyres must be of the same structure – either all with run flat capability or all standard radial tyres.
The tables below summarize both the regulatory requirements and the ETRTO recommendations on mixed fitments (between axles and on the same axle) involving tyres with and without run flat capability.

Legal Requirement by axle fitment					
	Structure	**Radial**			**Runflat**
Structure	**Axle 1** / **Axle 2**	Without Runflat capabilities	EMT [a]	Manufacturer-specific marking only [c]	Runflat [a] (RF & ZRF)
Radial	Without Runflat capabilities	+	+	+	–
	EMT [a]	+	+	+	–
	Manufacturer-specific marking only [c]	+	+	+	–
Runflat	Runflat [a] (RF & ZRF)	–	–	–	+

Legal requirement by tyre position fitment					
	Structure	**Radial**			**Runflat**
Structure	**Left side** / **Right Side**	Without Runflat capabilities	EMT [a]	Manufacturer-specific marking only [c]	Runflat [a] (RF & ZRF)
Radial	Without Runflat capabilities	+	~ [d]	~ [d]	–
	EMT [a]	~ [d]	+	~ [d]	–
	Manufacturer-specific marking only [c]	~ [d]	~ [d]	+	–
Runflat	Runflat [a] (RF & ZRF)	–	–	–	+

[a] Pursuant to UN regulation 30 and ISO 16992:2018; ZRF: runflat tyres with ZR speed marking

[c] This is indicating Runflat capabilities and exclude tyres that are approved and marked as EMT or Runflat. Specific markings of tyre or vehicles manufacturers can be retrieved in the websites and catalogues of the manufacturers or in the vehicle booklet.

[d] Standards does not absolve the user of them from any product liability responsibilities or legal obligations that may be required and which may vary from country to country

The above mentioned Legal Requirements adress only tyres with the same size designation and service description

–	Not permitted
~	Vary from country to country
+	Permitted

Recommendation Tyre Industry by axle fitment					
	Structure	**Radial**			**Runflat**
Structure	**Axle 1** / **Axle 2**	Without Runflat capabilities	EMT [a]	Manufacturer-specific marking only [c]	Runflat [a] (RF & ZRF)
Radial	Without Runflat capabilities	+ [b]	–	–	–
	EMT [a]	–	+ [b]	+ [b]	–
	Manufacturer-specific marking only [c]	–	+ [b]	+ [b]	–
Runflat	Runflat [a] (RF & ZRF)	–	–	–	+ [b]

Recommendation Tyre Industry by tyre position fitment					
	Structure	**Radial**			**Runflat**
Structure	**Left side** / **Right Side**	Without Runflat capabilities	EMT [a]	Manufacturer-specific marking only [c]	Runflat [a] (RF & ZRF)
Radial	Without Runflat capabilities	+ [b]	–	–	–
	EMT [a]	–	+ [b]	~	–
	Manufacturer-specific marking only [c]	–	~	+ [b]	–
Runflat	Runflat [a] (RF & ZRF)	–	–	–	+ [b]

[a] Pursuant to UN regulation 30 and ISO 16992:2018; ZRF: runflat tyres with ZR speed marking

[b] Recommendation: Same manufacturer or brand name, same tread pattern or commercial name. Same vehicle manufacturer specific marking if applied.

[c] This is indicating Runflat capabilities and exclude tyres that are approved and marked as EMT or Runflat. Specific markings of tyre or vehicles manufacturers can be retrieved in the websites and catalogues of the manufacturers or in the vehicle booklet.

The above mentioned Legal Requirements adress only tyres with the same size designation and service description

–	Not Recommended
~	Tyre manufacturer have to be consulted to ensure the compatibility
+	Recommended

Mixing of different brands

As with standard tyres, different brands of tyres with run flat capability may have different characteristics. It is therefore advisable to consult the tyre manufacturers concerned regarding the mixing of different makes of tyres with run flat capability on the vehicle. In most European countries it is not allowed to mix different makes or types of tyres on the same axle. In the countries were it is not forbidden, it is not recommended to mix different makes or types of tyres on the same axle.

Tyres with internal foam layer

These tyres incorporate a polymeric foam exceptionally applied to the tyre internal layer after curing to reduce vehicle interior noise caused by tyre cavity resonance on all road surfaces. It is recommended that all repairs and inspections of tyres with internal foam are completed by a specialist on tyre repair.
When the consumer sees a nail or other penetrating object, he is advised to go to a dealer who should dismount the tyre, remove the object, inspect for internal damage, and determine if the tyre can be repaired and used for further service.

Used passenger car tyres

Used tyres should not be fitted if their previous history of use, maintenance or storage conditions are uncertain or unknown. A qualified tyre specialist should inspect the internal and external condition of the used tyres prior to application (see the general recommendations on used tyres for more details).

Tyre Pressure Monitoring System for passenger car tyres

See the general recommendations on Tyre Pressure Monitoring System for passenger cars and commercial vehicles.

E.T.R.T.O. Recommendations on Commercial Vehicle Tyres

Introduction

Although in the majority of cases commercial vehicle tyres are used by professionals having a sound knowledge of operating conditions, E.T.R.T.O. considers it necessary to re-state their usage recommendations. It should be clearly understood that these recommendations are applicable to tyres used for normal highway service. For other specific conditions it will be necessary to modify or supplement them following agreement between the tyre and vehicle manufacturers.

Care and maintenance

Tyre fitting

These operations must be entrusted only to a specialist who has the necessary equipment and expertise. Inexpert fitment can result in personal injury and visible or concealed damage to the tyres and wheels. Such damage may lead to failure in service and possible injury.

In addition to the technical standards in the E.T.R.T.O. Standards Manual and the instructions given by tyre, rim and valve manufacturers in their technical publications, E.T.R.T.O. recommends the following:

- Ensure that the rim is correct for the tyre size being fitted and is capable of supporting the required load.
  All tubeless tyres must be fitted on airtight rims. It is recommended that rims with profiles designed for bead retention be used for tubeless radial tyres with a load index ≤ 121 fitted on 5° drop-centre rims (hump rims).
  Where no tubeless marking appears on the tyre sidewalls, tyres are intended for fitment with an appropriate inner tube.
- Remove all contamination (dirt, grease, rust, fitting lubricant, etc.) From the wheel.
  Inspect the wheel carefully. If it is cracked or deformed, it must be replaced. In the case of multi-piece rims, check that the different components are correct and compatible. Do not mount tyres on wheels showing any sharp edges or burring around the bead seating area to avoid any tyre damage.
- In the case of replacement of tube type tyres, always fit a new inner tube, valve and flap.
  In the case of tubeless tyres fit a new valve adapted to the in use inflation pressure and valve grommet, and a new seal when they are fitted on rims with a detachable flange.

- Check that the tyres and inner tubes are free from damage and take particular care that no foreign matter remains inside the tyre or between the tyre bead and the rim bead seat.
- Lubricate the tyre beads with an approved tyre lubricant only. This applies especially to tubeless tyres, particularly those mounted on rims with safety humps. If this recommendation is not followed, bead damage or fracture during fitting could occur.
  Note : the use of hydrocarbons is prohibited.
- Carefully check the condition of the valve hole. The edge of the valve hole on the tyre side of the rim must be rounded and smooth, while on the weather side the edge must be free from any burrs that can damage the valve stem.
  In order to avoid damage to the inner tube or flap, ensure that the valve is located correctly in the valve hole. The use of valve extension pieces is advised for those valves to which access is difficult, as in the case of the inner tyre of twin assemblies.
- With the tyre on the rim, start the inflation in two steps making certain that the beads are seating correctly on the rim seat. Stop inflating the tyre at 150 kPa (1.5 bar) (1st step), inspect the tyre and ensure that there are no tyre deformations or blisters. Deformations or blisters require the dismounting of the tyre and examination by a specialist. Ensure that the beads are correctly located against the rim flange.
  Then place the tyre in vertical position into a safety cage and inflate it to the specified inflation pressure.
  In the case of tyres fitted on multi-piece rims, with the tyre on the rim, and the assembly flat on the ground, inflate until the detachable flange is located correctly against the lock rim. Correct location is facilitated by tapping these rims with a rubber hammer during the preliminary inflation. However, the tyre must not be inflated above a pressure of 100 kPa (1.0 bar) before being placed in a safety cage.
- Ensure that the airline between the valve and the pressure gauge is long enough to enable the fitter to stand clear of any danger from flying components in the event of a tyre or wheel burst.

Used tyres should not be fitted if their previous history of use, maintenance or storage conditions are uncertain or unknown. A qualified tyre specialist should inspect the internal and external condition of the used tyres prior to application (see the general recommendations on used tyres for more details).

Tyre removal

These operations must be entrusted only to a specialist who has the necessary equipment and expertise. Inexpert removal can result in personal injury and visible or concealed damage to the tyres and wheels. Such damage may lead to failure in service and possible injury.

- Before each operation, it is essential to make sure that the tyre is completely deflated by unscrewing and removing the valve insert.
- In addtion, in the case of rims of multi-piece construction, for example,

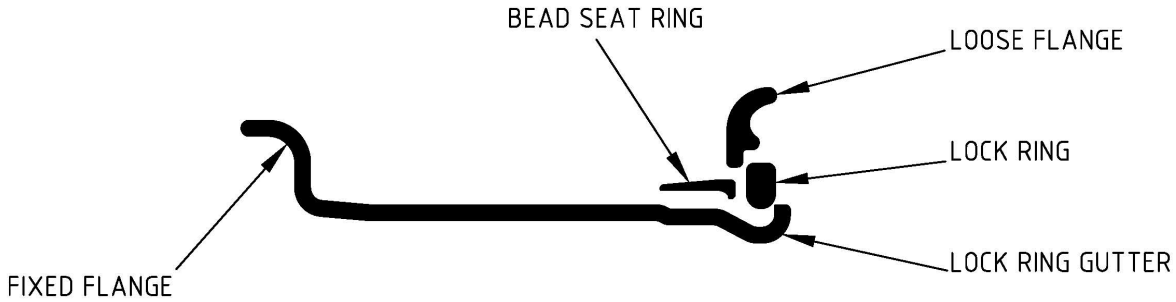

The operation must start by the removal of the lock ring and the detachable rim flange. At all times the operation must start by the removal of the lock ring and the detachable rim flange. At all times, the operator must avoid standing in front of the wheel in the path of loose flange components which might spring-off in the case of a damaged wheel.

- **Tyre fitting/removal: special case of external valve hole, tubeless 15° drop-centre rims with hump(s)**

  The single or double hump rim contour of those 15° drop-centre rims with an external valve hole makes the unseating of the tyre bead very difficult when using traditional hand tools. Therefore, it may be necessary to use specialised service accessories that are able to exert localised pressure to force the bead over the hump.
  It is important that these accessories are designed in such a way that they do not cause damage to the tyre bead/sidewall, to the attachment face, wheel centre hole, bead seat or rim flange. Alloy wheels are particularly at risk.
  Additionally different types of valves are available on the market. It is necessary to use only those of which the bases are free of any roughness, sharp angle or prominent points which may damage the bead when the tyre is passing over the hump during the mounting and/or the dismounting.

In case the Drop Centre well is not centered on the rim profile, then the mounting and dismounting has to be done from the side closest to the drop centre well. In case of doubts on the mounting and/or dismounting side, the wheel/rim manufacturer should be consulted.

Inflation pressure

These recommendations are specific to Commercial Vehicles tyres.
Items which are common to all products are referred into the General Section and must be considered too.

In general, the tyres for trucks and buses must be inflated according to the load they carry. It is dangerous to run with pressures different from those recommended by the tyre and/or vehicle manufacturers.

Storage of tyres, tubes and flaps

See pages 12 to 14.

Wheels

The condition of wheels should be checked regularly particularly for distortion of rim flanges, wheel discs and trilex sectors. Cracked rims or wheels must be replaced, paying particular attention to the inside wheel of twin fitments. It is strongly recommended that tyres are deflated before removal from the vehicle.
In the event of wear/damage to rim flanges, it is recommended that all sharp edges be removed in order to avoid tyre damage during fitting and use.

Damaged or distorted wheels, or wheels having cracked or deformed stud hole seatings, must not be repaired or used in service.

Cracked rims or discs must **never** be welded under any circumstances because the welding will crack again after a very short time under the dynamic stresses involved in running.
In order to avoid tension crack corrosion on the wheels as well as tyre damage, the anti-corrosive protection on the wheel must be fully guaranteed, even on the tyre side of the rim and rings. The surface protection should be checked at intervals and during tyre fitting, and renewed as necessary after removing any contamination from rust.

- **Wheel selection in dual mounting positions**

The vehicle manufacturer or the tyre fitter should verify that for wheels which are dual mounted, the correct wheel offset is respected. The minimum offset of the selected wheel, should be equal or higher than half of the defined minimum Dual Spacing of the relevant tyre as per ETRTO standard.

Tyre damage

It is dangerous to neglect tyre damage.
The tyres on a vehicle should be examined regularly with particular attention being paid to the tread for evidence of abnormal wear, cuts, localised deformities and foreign bodies (grit, nails,...), to the sidewalls for cuts, cracks, impact damage, abrasion and localised deformities, and to the bead/rim flange region for signs of chafing, rim damage, misfitment and, between twin tyres, for cracks, abrasions, localised deformities and foreign bodies. In cases of any such damage, the tyre must be checked by a specialist.
It is dangerous to re-inflate a tyre which has run flat or severely under-inflated and any such tyre must be removed for examination by an expert to check for tyre, tube, valve or rim damage and to be assessed for further service.

A tyre specialist should also be consulted if a tyre has suffered a heavy impact on kerbs, pot-holes and general road hazards or after prolonged use of tyres on poor surfaces, even though no damage is visible, because damage could seriously curtail tyre life. Abnormalities in running

- heavy vibrations, sudden pull to the left or right etc. - should also be investigated without delay.

Following a puncture it is imperative to pull-up as soon as possible and change the tyre because running under-inflated may cause structural deterioration. A tyre which has been punctured must always be removed from the wheel to be checked for secondary damage. Anti-puncture products in the form of liquid sealants are not recommended as they can mask secondary damage and preclude internal examination.

If a repair to a tyre is necessary and feasible, it must be carried-out by a tyre specialist as soon as possible in order to avoid further deterioration of the structure. In any case all tyre repairs must be entrusted to a tyre specialist who must then take full responsibility for them.
The exposure of tyres to temperatures in excess of 90° C may cause permanent damage to the tyre and this is to be avoided. Such exposure may be caused by brakes, exhaust pipes, catalytic converters, etc.

Tyre minimum tread depth

The tread of a tyre is provided with a raised pattern or sculpture the main purpose of which is to ensure maximum tyre grip on wet or slippery roads. However, tread pattern alone does not control tyre grip. In addition to the features of the pattern itself, tyre construction, the chemical composition of the tread, road surfaces, weather conditions, mechanical features of the vehicle, driving style and particularly speed, are all important factors affecting tyre/road adhesion.

In the case of commercial vehicle tyres, particularly those on the heavier lorries, the load and the resulting high ground pressure ensure good grip even on wet or slippery roads, although tread patterns are far less complex than for car tyres.

All these factors, particularly the factors not dependent on the tyre itself, make it practically impossible to define precisely the minimum tread depth compatible with safety. All that can be stated is that for a particular tyre under given conditions, road grip gradually decreases with tyre wear. The driver should allow for this fact and reduce speed on wet roads accordingly. There is no exact time during the life of a tyre when the driver has to face skidding dangers which did not exist a moment before.

> *E.T.R.T.O. considers that it is impossible to specify a minimum tread depth which would be valid for all types of tyres beyond which further use becomes dangerous. However some tyres have tread wear indicators (normally 1.6 mm) to warn the user that the tyre is approaching the limit of wear.*
>
> *The legal minimum tread depth for commercial vehicle tyres varies depending on the country of use. Users should be aware of the requirements for the countries where the tyre is used.*

Tyre regrooving

- **General**

Regrooving or recutting consists of cutting a pattern in the tread, deeper than the original pattern, in order to extend the tyre life. Care should be taken to ensure that the regrooving process does not expose the tyre casing, breakers or belts and that sufficient rubber is left for its protection.
Tyre manufacturers publish instructions regarding the patterns to follow when regrooving their tyres as well as the relevant recommended widths and permitted depths below the base of the original pattern.

European and north american regulations require that 'each new tyre designed and constructed for regrooving shall be labelled on both sidewalls with the word 'regroovable' or the symbol ' ' at least 20 mm in diameter.' A minimum rubber thickness of 4 mm between the bottom of the original principal grooves and the upper surface of the belt is necessary to classify a tyre as regroovable.

- **Technical requirements**

  - Regrooving should only be carried-out by specially trained personnel.
  - On no account must tyres that have been worn smooth be regrooved (even if the smooth area is limited) as there is no indication of how much base rubber is left. As there can be a degree of uneven tread wear, with most tyres it is better to check the tyre for regrooving when a sufficient amount of protection base rubber of at least 2 mm will be remaining.
  - Before regrooving, the tyre should be examined to ensure that it is in good condition and to ensure the tyre has not been previously regrooved. To trained personnel it is usually obvious if a tyre has been regrooved previously since the groove will not have sharp corners on zigzag grooves and there will be marks in the groove left by the regrooving tool. However, if the new tyre had tread wear indicators or tie bars, these will no longer be visible as they will have been removed during the first regrooving process.
    Should it be considered necessary or desirable to completely or partially regroove the tyre more than once, the tyre manufacturer **must** be consulted.
    Any damage or unsatisfactory repair should be repaired correctly in advance. If the tread shows evidence of cracking, multiple cuts,or tearing of the tread blocks, then regrooving is not recommended.
    Remove flints and other foreign bodies trapped in the tread rubber to avoid damage to the cutting blade or the tyre.
    Regrooving should be carried-out with a regrooving tool which has an electrically heated blade and preferably in a well ventilated place.
  - Choose a blade the width of which corresponds to the width of regrooving recommended in the instructions issued by the tyre manufacturer for the specific tread pattern and tyre size.

- The actual remaining depth should be measured at several places around the tyre. The depth of cut on the cutting tool must be related to the minimum pattern depth found.
- To set the cutting blade, add the minimum pattern depth measured to the permitted regroove depth specified in the instructions issued by the tyre manufacturer for the specific tread pattern and tyre size.

Example

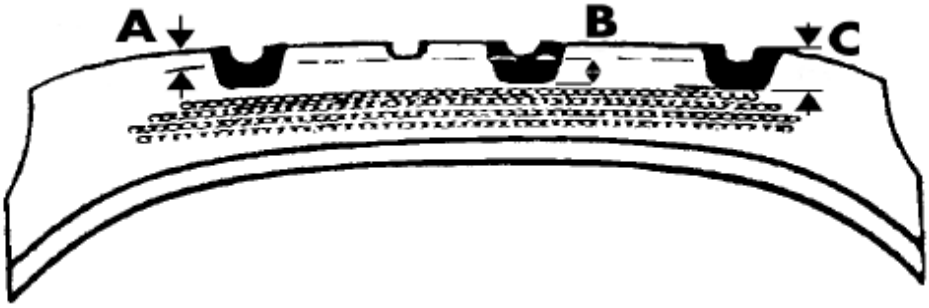

Minimum remaining depth of the original pattern	→	**A**
Permitted regroove depth from the tyre manufacturer's instructions	→	**B**
Depth of setting of the cutting blade	→	**C = A + B**

- Mount the tyre on a re-grooving stand. Proceed to regroove the tread exerting even pressure following the re-cut pattern straight through any tread tie-bars, as shown in the instructions issued by the tyre manufacturer for the specific tread pattern and tyre size.
- When the above procedures are carefully followed a sufficient amount of the base rubber remains to protect the tyre casing, breakers or belts. In no case must any part of the cord structure of the tyre be cut or exposed as this renders the tyre unsafe and is likely to preclude subsequent retreading.

- **Responsibilities**

The regroover must take total responsibility for the examination and the work carried-out on the tyre and the subsequent performance of the tyre relative to this.

Tyre repair and retreading

In the course of its life, a tyre is subjected to an enormous number of constraints and can be damaged in many ways. It is imperative that the work of repairing or retreading is entrusted only to competent companies. After a careful examination by a specialist to decide whether repair or retreading is possible, these companies must take total responsibility for the examination and the work carried out on the tyre.

Tyre ageing

Tyres fitted to vehicles which are parked for long periods (e.g. cranes, specialist trailers etc..), will tend to age and crack more quickly than those which are used and run frequently. In such circumstances it is important to jack the weight off the tyres and to cover them so that they are protected from direct light.
Particular attention must be paid to spare tyres which may be old or aged.
In addition to this recommendation, see also general recommendation in the “Tyre ageing” chapter at page 15.

Tyres subjected to electrical discharges

Pneumatic tyres can be seriously damaged by electrical contact or discharges that generally originate from direct contact with high voltage electric lines or their electric arcing. Possible consequences are damages that are difficult to detect visibly but which can cause serious degradation of the tyre. These damages may be confirmed by the actual sighting of the contact or can be detected through a destructive examination of the tyre. Therefore, it is recommended that, as a precaution, all tyres on a vehicle that has been subjected to such an electrical contact or arcing should be removed and destroyed to prevent further use or remounting on another vehicle.

Tyre/rim combinations

For recommended and permitted tyre/rim combinations, consult the current E.T.R.T.O. Standards Manual. For other tyre/rim combinations, for existing vehicles, consult the E.T.R.T.O. Engineering Design Information and the tyre and rim manufacturers concerned.

Consult rim and wheel manufacturers for confirmation of the strength of the rim/wheel for the intended service.

Choice of valves

Appropriate valves shall be chosen in accordance with the rim aperture and the inflation pressure to be used.

TPMS valves assembly to the rim

Tyre Pressure Monitoring System for commercial vehicle tyres

See the general recommendations on Tyre Pressure Monitoring System for passenger cars and commercial vehicles.

Selection of replacement tyres

General

The tyres fitted to your vehicle as original equipment were selected by the vehicle and tyre manufacturers considering all aspects of the vehicle's operation. Changes in tyre size, structure, load and speed rating should not be made without first seeking advice from the tyre or vehicle manufacturer as the effect on safety, vehicle behaviour and clearance must be considered.
Replacement tyres must be suitable for the type of vehicle and the applications on which it is used. These applications may vary - type of service, route, load, speed - but tyre manufacturers offer a comprehensive range of tyre sizes, constructions and tread patterns and are competent to advise the user on tyre selection.
In particular:

- C-Type tyres must not be replaced with tyres for passenger cars even if the size is the same and the service description is compatible with vehicle maximum load and maximum speed.
- It is not recommended to fit **F**ree **R**olling **T**yres marked with the inscription "FRT" to front axles and drive axles of motor vehicles of categories M or N.
    - "Free Rolling Tyre" means a tyre, designed for the equipment of trailer axles and axles of motor vehicles other than front axles and drive axles, bearing the inscription "FRT".
    - "Front axle" means any axle, forward of the mid-point of the chassis on which the wheels are controlled by the steering system.

This advice is backed by extensive facilities, both in equipment and personnel, for carrying-out research and development over the full range of service conditions. In special cases, a change of tyre and/or wheel equipment may be necessary.

Tyre load and speeds

Most tyres are marked with a service description comprising a load index or load indices (numbers) and a speed symbol (letters) e. g. 150/146L. Tyres fitted as original equipment are suitable for the speed and maximum axle weight of the vehicle.

In principle replacement tyres should have a load index (or load indices) at least equal to those of the original tyres specified by the vehicle manufacturer or the legal load limit, whichever is lower, and a speed symbol sufficient to meet legal requirements and vehicle speed capability.

Certain special tyres (for example M+S) may have a lower speed rating than the original highway tyres. In such cases the driving speed must be restricted, as appropriate.

If in doubt, or in the absence of a service description, consult a tyre specialist.

Overloading or exceeding the speed capability of a tyre causes excessive heat build-up which may lead to tyre breakup.

How to read the information marked on the tyre

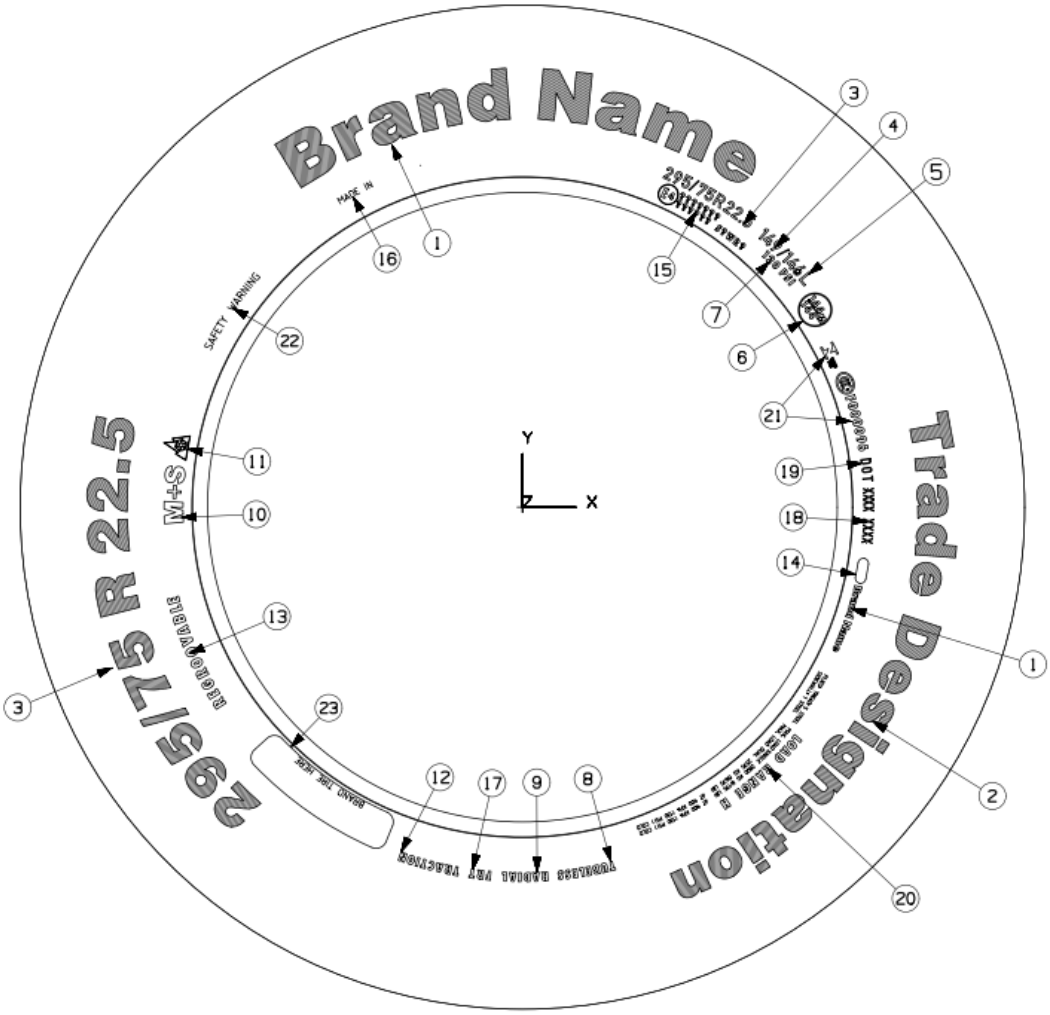

1. Manufacturer’s name or brand name
2. Commercial name

3. Tyre size
4. Load indices for single and dual fittment
5. Speed symbol
6. Supplementary service description
7. PSI Index or reference pressure in kPa to be used for UN regulation 54 type approval tests
8. Structure
9. It indicates tubeless or tube type tyres
10. Mud and Snow marking (*)
11. It indicates tyres designed for use in severe snow conditions (*)
12. It indicates a tyre intended to be fitted primarily to the drive axle(s) (*)
13. It indicates that the tyre can be regrooved (*)
14. Production date Week/Year
15. UNECE type approval mark and numbers
16. Country of origin
17. It indicates a tyre designed for use on axles other than front steering and drive axles (*)
18. Tyre Identification Number (consisting of Plant Code, Size Code and Type Code) (**)
19. Symbol indicating compliance with the requirements of the US Dept. of Transportation (**)
20. indicates inflation pressure, load capacity, load range, ply number/material (**)
21. Compliance marks of national regulations (*)

(*) Where applicable
(**) optional, only mandatory in countries where compliance with the FMVS standards is required.

The above sketch is given as an example only. All legal requirements have to be taken into account.
This picture is for information use only and shall not be considered as a model. For presence, size, position, lettering, etc. of the markings consult the ad-hoc regulations.

Mixed fitments

It should be clearly understood that, notwithstanding the technical recommendations below, users must also comply with their national legislation.

Except in the case where a temporary-use spare is fitted all the tyres on the vehicle must be of the same structure (radial or bias).

In addition, the tyres on a given axle must be of the same make, size, structure (radial or bias), and category of use (normal, snow or special use) and have approximately the same degree of tread wear.

In cases where one type is to be replaced by another, the tyre manufacturer must be consulted about special recommendations of fitments for particular usages.

In case of replacement of a single tyre on an axle (e.g. due to damages) it is suggested to have the new one with approximately the same degree of tread wear as the remaining one. Tyres in dual fitment must be approximately of the same external diameter.

M+S C-type tyres

Taking into account the whole range of conditions encountered in winter, the user's choice of tyres is based on many factors – geographical location, length and frequency of journeys, local legal requirements, etc. – in the knowledge that optimum vehicle handling is obtained from the fitment of four tyres of the same type.
Tyre manufacturers provide tyres marked M+S for essentially all winter conditions, but they can be classified broadly into three main types, namely M+S tyres without 3PMSF (i.e **3 P**eak **M**ountain with **S**now **F**lake) marking, M+S tyres with 3PMSF marking and studded M+S tyres.

- **M+S tyres without 3PMSF marking**

  These tyres (without studs) are effective in most conditions (that is in presence of snow, melting snow (mud), slush, ice, cold rain, winter temperatures even if it is above 0°C). However, they do not always reach the standard of studded tyres on melting ice nor the standard of M&S tyres with 3PMSF marking on severe snow conditions. In general, the design of these tyres (structure, tread pattern and compounds) gives adequate performance in general winter conditions and they are not subject to the legal constraints of studded tyres as they can also be used in normal (non-winter) conditions.

- **M+S tyres with 3PMSF marking**

  These tyres are designed for use on severe snow conditions and exceed the minimum performance on snow required by the UN ECE Regulation 117 for bearing the 3PMSF marking.

  3 Peak Mountain with Snow Flake (3PMSF) sidewall marking of snow tyres for use in severe snow conditions

  Minimum 15 mm base and 15 mm height, placed adjacent to the M+S marking.
  Above drawing not to scale.

Use of M+S tyres with or without 3PMSF marking is regulated in several countries. Always make sure to have your vehicle fitment meeting the regulatory requirements of the regions where you drive.
The fitment of four M+S tyres is recommended.
The tyre manufacturer's advice on fitment should be followed and the same direction of rotation should be maintained from one winter to the next.
In addition, M+S tyres with or without 3PMSF marking should be run-in by avoiding harsh acceleration or cornering or sudden braking for some hundred kilometres (i.e. at least 100 kilometers).
The maximum speed corresponding to the speed symbol on the tyre should not be exceeded even if the vehicle is capable of a higher speed.
In the European Union the UN Regulation 142 applies and it allows to fit M+S tyres with 3PMSF marking which have a speed symbol lower than the one required for the car but the speed symbol cannot be less than Q. In that case a sticker specifying the maximum speed capability of the fitted snow tyres, shall be displayed inside the vehicle in a prominent position readily and permanently visible to the driver.

- **Studded M+S tyres**

  The studs are inserted into holes provided for them in the tread. Some countries regulate their use legally, particularly with regard to the period of use, speed limits and the disposition of studs (number, position and protrusion).
  E.T.R.T.O. recommends that :

  - New studded tyres should be run in for approximately 300 km at a moderate speed.
  - When a car is equipped with studded tyres, all running wheels should be fitted and this is also mandatory required by some countries. In fact, studded tyres on only one axle can cause instability - for example on braking when decelerating on icy roads - particularly on front-driven cars with studded tyres on the front axle only. Similarly instability, particularly on bends, can occur on rear driven cars equipped with studded tyres on the rear axle only.
  - Heavy braking and rapid acceleration should be avoided on studded tyres.
  - Studded tyres, when re-fitted after a period of disuse, should be mounted so as to turn in the same direction as when previously fitted. At the end of the winter season therefore, the direction of rotation or the wheel position should be marked on each tyre.

In absence of national legislation, a speed of 100 km/h should not be exceeded on roads free of snow and ice because of reduced road grip of studs being considerably affected by speed, acceleration and sharp braking.

Downgraded tyres

It is recommended that downgraded tyres be marked with the following inscription:

DA

There is no restriction on the use of tyres marked ‘DA’.
Tyres marked ‘DA’ (on at least one sidewall) are tyres with only minor external blemishes which do not affect their performance in any way.
The location of the marking ‘da’ is left to the discretion of the tyre manufacturer.

Directional tyres

A directional tyre is a tyre that the manufacturer recommends to be used in one direction of rotation.Tyres featuring a V-shaped tread pattern are the most common example of directional tyres. The direction of rotation is generally identified by a directional arrow with the eventual addition of the word “ROTATION” on the tyre sidewall (others wordings like “DIRECTION” or “ROTATE” are sometime used as an alternative).
In the case of a vehicle equipped with a spare wheel assembly fitted with a directional tyre, this spare wheel assembly will run in the proper direction only when fitted to one side of the vehicle. The fitting of a directional tyre in the opposite direction does not constitute an unsafe condition. Although the tyre is then not fitted as recommended, vehicle overall performance and handling will not be compromised. Nevertheless, the use of a directional tyre in the opposite direction should be discouraged and should be considered as a temporary measure only. Continued use of a directional tyre in the opposite direction may lead to uneven tyre wear and/or increased interior noise and increased vibration levels.
E.T.R.T.O. further recommends that all tyre manufacturers indicate the preferred direction of rotation on directional tyres with a clear arrow marking on the sidewall of the tyre, and include a clear statement in their technical literature stating that the use of the tyre in the opposite direction should only be considered as a temporary measure.
It should be clearly understood that, notwithstanding the technical recommendations above, the use of directional tyres must also comply with the relevant national legislation.

Tyre use and maintenance for motor-caravans (or motor homes)

Fit the right tyres

As with all road vehicles, it is essential that tyres of the correct type be fitted.

Tyres usually fitted to motor-caravans are of a "light commercial (“'C”' or “CP”)" type. CP type-tyres (commercial vehicle tyres for service on motor-caravans) have only been marketed in the last few years. This followed a study which demonstrated, that overloading is generally the main cause of tyre failure, due to the fact that this type of vehicle often carries an excessive or badly distributed load, which, may be higher than that permitted by the load index (LI) of the tyre; usually on tyres fitted to the rear axle.
CP-type tyres have been designed to cater for the higher loads imposed by motor-caravans, especially when fitted in single formation on the rear driven axle (also see following comments below referring to the “service description”). For these reasons, it is recommended that motor-caravans are only fitted with CP-tyres.

It is always advisable to have the same type of tyres on all wheels and axles. Only tyres of the same size and service description (load index / speed symbol) and identical wheels should be fitted across an axle and carried as a spare. Tyre pressures across an axle should be equal. Additionally, any deviation from the original type of tyre is likely to have an effect on the handling and general characteristics of the vehicle.

Therefore, before changing the type of tyres, always consult either the vehicle or the tyre-manufacturer.
When fitting any new tyre size differing from the original equipment or the same tyre size with different service conditions, it is required to ensure compliance with applicable regulations, regarding specifically, the vehicle’s load and speed capability. Never replace tyres with those of a lower speed rating or lower load capacity.

Referring to the "service description"

The CP-type tyres are normally used in single fitment. In this case only, tyres on the rear axle have to be inflated to a higher inflation pressure as indicated in the Standards Manual, in order to compensate for severe conditions of unequal load distribution, but with no further concession to increase the maximum load capacity.
When these tyres are used in dual wheel fitment, a tyre pressure increase is not required and the tyre load capacity is indicated by the “load index” marked on the sidewall for dual wheel fitment. Some CP-type tyres currently in the market do not carry a “load index” for dual wheel fitment; in that case the axle load capacity is calculated as 1.85 times that of a single wheel fitment.

General recommendations for motor-caravans (or motor homes)

Check the pressures

The correct inflation pressure for motor-caravan tyres will be shown in the vehicle / chassis handbook.

Tyre care

Check your tyres regularly but particularly when the motor-caravan has not been used for some time. Vehicles that are not normally used during winter should be thoroughly inspected prior to re-use. Inspect for any sign of deterioration in the tyres such as sidewall cracking and/or carcass deformation. Tyres fitted to a stationary vehicle, particularly if parked in coastal areas may deteriorate more quickly over time than those in regular and frequent use. If a motor-caravan remains stationary (parked) for a length of time, it is requested to cover the tyres in order to shield them from direct sunlight and, if possible, jack the weight off them. If in doubt about the condition of your tyres, have them checked immediately by a tyre specialist.

Do not overload

At anytime it is dangerous to overload tyres. Police may take action against drivers when their vehicle is carrying an excessive or poorly distributed load. A poorly distributed load can cause overloading of one or more tyres, even when the maximum permissible total load is not exceeded. It is important to spread the load evenly around the vehicle and as low as possible, thus not impairing the stability of the vehicle. Failure to adhere to this rule may initiate tyre problems and possible tyre failure.

Care and maintenance

Tyre fitting and removal

In addition to the technical standards in the E.T.R.T.O. Standards Manual and the instructions given by tyre, rim and valve manufacturers in their technical publications, E.T.R.T.O. recommends the following :

- **Fitting**

  - Ensure that the rim is correct for the tyre size being fitted.
  - Clean the tyre and the wheel thoroughly to remove all contamination (dirt, grease, rust, fitting lubricant, foreign matter, etc.). Inspect the wheel carefully paying particular attention to the spoke nipples and ensuring that the rim band is in good condition and covers them.
    If the rim is cracked or deformed, it must be replaced.
    Do not mount tyres on rims showing any sharp edges or burring around the bead seating area to avoid any tyre damage during mounting.
    Carefully check the condition of the valve hole. The edge of the valve hole on the tyre side of the rim must be rounded and smooth, whilst on the hub side the edge must be free from any burrs that can damage the valve stem.
  - Lubricate the tyre beads with water or an approved proprietary tyre lubricant only. This applies especially to tubeless tyres which are mounted on rims with safety humps. If this recommendation is not followed, bead damage or fracture during fitting could occur.
    Note : The use of hydrocarbons is prohibited.
    Do not use an excessive amount of lubricant as this can result in bead ‘creep’ in service.
    If necessary dust the tube with French chalk, but do not use an excessive amount as this can result in tube failure.
    Take note of any directional arrow on the sidewalls of the tyre.
  - With the tyre on the rim, start the inflation making certain that the beads are seating correctly on the rim seat. After inflation ensure that the beads are correctly located against the rim flange.
    Non compliance with this procedure can result in tyre failure in service.
  - Ensure that the air line between the tyre valve and the pressure gauge is long enough to enable the fitter to stand clear of any danger from flying fragments in the event of a tyre or wheel burst.
    In order to comply with the above fitting instructions, it is sometimes necessary to use a pressure greater than the normal recommended maximum pressure.

For obvious safety reasons tyre and rim manufacturers should be consulted to determine the permissible maximum fitting pressure.

- Wire-spoked wheels are not air-tight. Always fit an inner tube and a rim band.
- For safety reasons always use a new tube of the correct size marking when fitting a new tube type tyre and a new tubeless valve when fitting a new tubeless tyre.
  Where no tubeless marking appears on the tyre sidewalls, tyres are intended for fitment with an appropriate inner tube.
- All tyres for tubeless applications must be fitted on airtight rims which must have profiles designed for bead retention. Where tubeless tyres are fitted on rims which are not suitable for tubeless applications, an appropriate inner tube shall be fitted.
- For tubeless tyres used on motorcycles with maximum speed over 240 km/h fitment with a tube is not recommended.

Used tyres should not be fitted if their previous history of use, maintenance or storage conditions are uncertain or unknown. A qualified tyre specialist should inspect the internal and external condition of the used tyres prior to application (see the general recommendations on used tyres for more details).

- **Removal**

  - Before commencing removal, check that there is no danger of the tyre bursting due to damage (cuts, bulges, exposed cords etc.).
  - To avoid danger when separating the beads from the rim, unscrew and remove the valve core before removing the tyre in order to ensure deflation.

In case the Drop Centre well is not centered on the rim profile, then the mounting and dismounting has to be done from the side closest to the drop centre well. In case of doubts on the mounting and/or dismounting side, the wheel/rim manufacturer should be consulted.

It is recommended that tyre fitting and removal be entrusted to a specialist who has the necessary equipment and expertise. In exceptional cases where this is not possible, it is imperative to comply with the tyre manufacturer's instructions on fitting and removal of tyres and with the national standards in force.

Inflation pressure

These recommendations are specific to Motorcycle tyres.
Items which are common to all products are referred into the General Section and must be considered too.

The cold pressures recommended by tyre manufacturers in their technical documents should be regarded as minima.
For sustained high speed riding, or when riding with a passenger or carrying heavy luggage, the recommended cold pressure should be increased by at least 30 kPa (0.3 bar). For special cases higher pressures may be recommended by motorcycle or tyre manufacturers.

How to read the information marked on the tyre

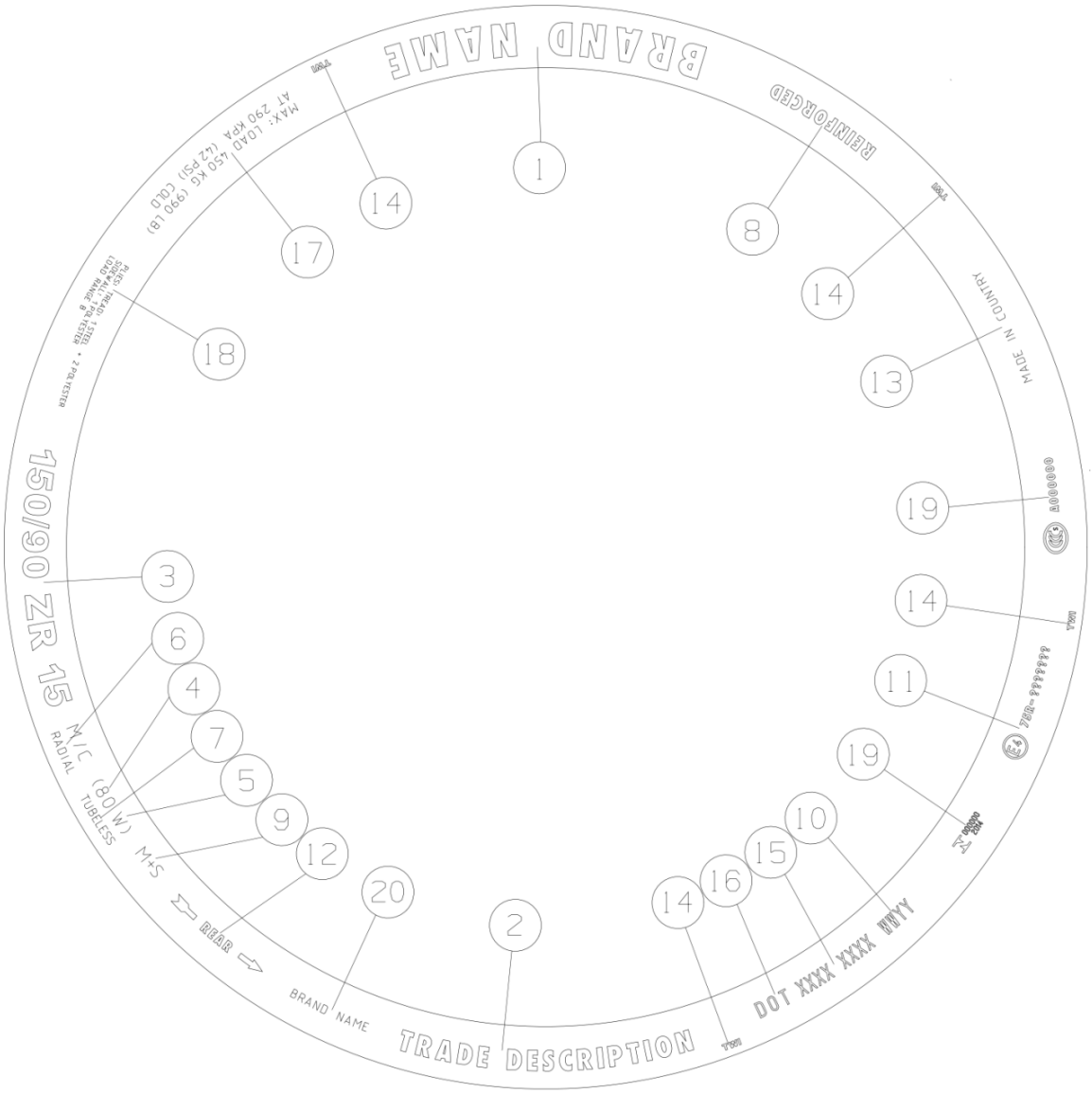

1. Manufacturer’s name or brand name
2. Commercial name
3. Tyre size
4. Load index
5. Speed Symbol
6. Structure
7. It indicates tubeless or tube type tyres
8. Extra Load or Reinforced marking (*)

9. Mud and Snow marking (*)
10. Production Date Week/Year
11. UNECE Type Approval mark and numbers
12. Directional arrow marking (*) (1)
13. Country of origin
14. It indicates the position of the tread wear indicators
15. Tyre Identification Number (consisting of Plant Code, Size Code and Type Code) (**)
16. Symbol indicating compliance with the requirements of the US Dept. of Transportation (**)
17. It indicates the maximum inflation pressure and the maximum load capacity (**)
18. It indicates the numbers and materials of reinforcement layers (**)
19. Compliance marks of national regulations (*)

(*) Where applicable
(**) optional, only mandatory in countries where compliance with the FMVS standards is required
(1) It indicates the direction of rotation of the tyre recommended by the manufacturer.

The above sketch is given as an example only. All legal requirements have to be taken into account.

Storage of tyres and tubes

See pages 12 to 14.

Wheels

Ensure that the rim band on wire-spoked wheels is in good condition as a protruding spoke head can damage a tube and cause a puncture.
The condition of the wheels should be checked regularly, particularly for alignment, distortion of flanges, and loose spokes. In the event of wear/ damage to rim flanges, it is recommended that all sharp edges be removed in order to avoid tyre damage during fitting and use.

Damaged or distorted wheels must not be repaired or used in service.

Divided wheels

Divided wheels are so constructed, that their two main parts, the rim portions of which may or may not be the same width, when securely fastened together, combine to form a rim having two fixed flanges.
Divided wheels should be designed so, that on the wheel, when it is fitted to the vehicle, only those screws and nuts are accessible, which fit the wheel to the vehicle. The connecting devices of the two wheel parts must differ and only be accessible, when the wheel is demounted from the vehicle. Spot weldings must not be used.
In case where the connecting devices are accessible when the wheel is mounted on the vehicle, they must be clearly identifiable.

The dismounting of the wheel from the vehicle and of the tyre from wheel must be done in the following sequence :

- Deflating of the tyre (to have no pressure on the tyre),
- Dismounting of the wheel from the vehicle,
- Disconnecting of the two wheel parts and dismounting of the tyre.

When mounting, the tyre shall be only inflated after the connecting devices of the wheels are secure.

Tyre damage

It is dangerous to neglect tyre damage.
Remove any stones or nails which may become embedded in the tread of the tyre. If left they will eventually penetrate through the casing and cause a puncture, leading to a breakdown on the road.
If damage such as a blister, rupture, or cut exposing the casing is visible on a tyre, or if it has suffered a violent impact (for example against a kerb) such that there has been a risk of internal damage, even though it appears to be sound it must be removed and examined by a tyre specialist as soon as possible in order to determine whether it is repairable.
If a repair to a tyre is necessary and possible, it must be made as soon as possible after the damage occurs in order to avoid further deterioration of the tyre structure.
Never make external temporary repairs in the tread or sidewall as they can be extremely dangerous.
All tyre repairs must be entrusted to an expert who must then take full responsibility for them.

Tyre minimum tread depth

The tread of a tyre is provided with a raised pattern, or sculpture, the main purpose of which is to ensure maximum tyre grip on wet or slippery roads. In addition to the features of the pattern itself, tyre construction, the chemical composition of the tread, road surface, weather conditions, mechanical features of the motorcycle, riding style and particularly speed, are all important factors affecting tyre/road adhesion. Tread depth is not the principal factor in tyre adhesion.
All these factors, particularly the factors not dependent on the tyre itself, make it practically impossible to define precisely the minimum tread depth compatible with safety. For instance, in pouring rain on a smooth ‘heavy traffic’ road, the fast rider should drive with the utmost care even if his machine is fitted with new tyres. All that can be stated is that for a particular tyre under given conditions, road grip progressively decreases with tyre wear. The rider should allow for this fact and reduce speed on wet roads accordingly.
There is no exact time during the life of a tyre when the rider has to face skidding dangers which did not exist a moment before.

> *E.T.R.T.O. considers that it is impossible to specify a minimum tread depth, valid for all types of tyres, beyond which further use becomes dangerous.*

it would be dangerous for riders to assume that they can drive safely in wet conditions without reducing speed merely because the tyres have not yet reached a stage where they should be changed. In particular, riders of sports machines should take care to replace their tyres in good time bearing in mind the machine 's performance capability.

Legal tread depth limits set in each Country shall always be respected.

Tyre grooving and siping

Regrooving, or supplementary grooving and siping down to the same depth as the original pattern, is not permitted on tyres for road use.

Tyre repair

In the course of its life a tyre is subjected to an enormous amount of abuse and can be damaged in many ways. It is imperative that the work of repairing it is entrusted only to competent companies.
Before attempting to repair a puncture, it is vital that a rigorous inspection for secondary damage inside the tyre casing be carried out, necessitating the removal of the tyre from the wheel. After a careful examination by a specialist to decide whether the repair is possible, these companies must take total responsibility for the examination and the work carried out on the tyre.

Tyre ageing

See general recommendation in the “Tyre ageing” chapter at page 15.

Tyre/rim combinations

For recommended and permitted tyre/rim combinations, consult the current E.T.R.T.O. Standards Manual.
Consult rim and wheel manufacturers for confirmation of the strength of the rim/wheel for the intended service.

Selection of replacement tyres

Every motorcycle has well defined mechanical and load/speed characteristics and the choice of tyres for it is governed largely by these factors.
Only motorcycle and tyre manufacturers are technically competent to make this choice. In particular, tyre manufacturers have extensive facilities, in both equipment and personnel, for carrying out research and developments over the full range of operating conditions.Therefore, when replacing tyres, it is essential to fit either the sizes and types identical to those fitted on the machine originally, or the alternatives recommended by tyre manufacturers in their official literature.
Tyres marked ‘Not for Highway Use’ or ‘N.H.S.’ must not be used on the public highway.

Tyres run-in

When new tyres are fitted they should not be subjected to maximum acceleration, hard cornering, or sudden braking for some hundred kilometres (i.e. at least 100 kilometers). Failures to respect this advice may result in loss of control.

Downgraded tyres

It is recommended that downgraded tyres be marked with the following inscription:

DA

There is no restriction on the use of tyres marked ‘DA’
Tyres marked ‘DA’ (on at least one sidewall) are tyres with only minor external blemishes which do not affect their performance in any way.
The location of the marking ’DA’ is left to the discretion of the tyre manufacturer.

Tyres for test rigs / rolling roads

Motorcycle tyre submitted to high performance test on test rigs may not be used later for normal driving. For high performance tests on test rigs, only special tyres or worn tyres are to be used.

Directional tyres

A directional tyre is a tyre that the manufacturer recommends to be used in one direction of rotation. Tyres featuring a V-shaped tread pattern are the most common example of directional tyres. The direction of rotation is generally identified by a directional arrow with the eventual addition of the word “ROTATION” on the tyre sidewall (others wordings like “DIRECTION” or “ROTATE” are sometime used as an alternative). Some tyres are marked with two arrows in opposite direction of rotation as a function of the fitted axle, in that case the word “FRONT” and “REAR” is associated to the pertinent arrow.

The fitting of a directional tyre in the opposite direction does not constitute an unsafe condition. Although the tyre is then not fitted as recommended, motorcycle overall performance and handling will not be compromised. Nevertheless, the use of a directional tyre in the opposite direction should be discouraged and should be considered as a temporary measure only. Continued use of a directional tyre in the opposite direction may lead to uneven tyre wear and increased vibration levels.

E.T.R.T.O. further recommends that all tyre manufacturers indicate the preferred direction of rotation on directional tyres with a clear arrow marking on the sidewall of the tyre, and include a clear statement in their technical literature stating that the use of the tyre in the opposite direction should only be considered as a temporary measure.

It should be clearly understood that, notwithstanding the technical recommendations above, the use of directional tyres must also comply with the relevant national legislation.

Recommendations for rims, made of material which may abrade (i.e. wear due to abrasive action of brake pads).
Sidewalls of rims made out of materials that wear through the abrasive action of brake pads will have a limited lifetime.
The lifetime of the bicycle rim will depend on the material of the brake pads and the use of the bicycle.
As a result of excessive wear, the bicycle rim will not be capable of maintaining the tyre pressure, causing instant deflation.
In order to maintain safety and provide correct fitting of the tyre, the user of such rims and brakes must be notified of the state of wear of the rim, allowing replacement of the rim when required.
Thus, the sidewalls of such rims should have an indicator to show when the rim must be replaced or at least, a warning present on the rim, specifying that it is subject to wear and must be regularly controlled.

Tyre fitting for normal crotchet type rims

In addition to the technical standards shown in the E.T.R.T.O. Standards Manual and the recommendations given by tyre, rim and valve manufacturers in their technical publications, E.T.R.T.O. recommends the following for tube type tyres

- **Fitting**

  - Ensure that the tyre size selected is compatible with the rim to which it is to be fitted. In particular the nominal rim diameter of the tyre size and of the rim size as shown in the relevant markings shall coincide. Verify that the tyre is not damaged or aged. Check that the inner tube is of a correct size for the tyre size.
  - Clean the rim to remove any contamination (grease, rust, foreign material, etc.).
    Inspect carefully, paying particular attention to the spoke ends and valve hole, which should be smooth, free from burrs or sharp edges. Do not mount tyres on rims showing any sharp edges or burring around the bead seating area to avoid any tyre damage. Check and tighten loose spokes. Damaged or distorded spokes or rims shall not be repaired and must be replaced.
  - Check the protective flap and replace it if damaged or deteriored. Fit the protective flap (rim tape), which should be sufficiently wide to completely cover the spokes heads and to remain centred on the rim during use. Position the rim tape so that the hole for the valve corresponds with the hole in the rim.
    The thickness of the rim tape should not exceed 0,8 mm unless stated otherwise by the rim manufacturer. Its mechanical strength should be sufficient to withstand the maximum recommended inflation pressure of the tyre.

- Lightly lubricate the tyre beads using a suitable lubricant (soapy solution or proprietary bead lubricant) so as to avoid damage during fitting. Avoid excessive lubrication, which may lead to rotation of the tyre on the rim during operation.
  Warning: do not use lubricants based on hydrocarbons or hydrocarbon mixtures.
- In case of machine fitting: introduce the inner tube into the tyre and inflate slightly until it is in light contact with the tyre. Over inflation will make fitting difficult. Insert the valve into the hole in the rim and mount the lower bead onto the rim, followed by the upper bead, ensuring that the inner tube does not become trapped between the bead and the rim flange.
  It is imperative that the device used to push the beads is carefully adjusted to avoid shearing the bead against the rim flange.
- In case of manual fitting: mount one bead onto the rim. Introduce into the tyre the inner tube, slightly inflated, starting by inserting the valve into the hole of the rim. Then, starting opposite the valve, mount the second bead onto the rim ensuring that the inner tube does not become trapped between the bead and the rim flange or the rim tape.
  Push the valve towards the inside of the rim to ensure that the tyre beads are correctly fitted.
- Slowly inflate the tyre so as to centralise the beads on the rim. Inspect carefully to ensure that both beads are correctly centred on the rim before inflating to the operating pressure.
  For safety reasons the maximum inflation pressure, recommended by the tyre and rim manufacturers, should never be exceeded.
- Secure the valve by screwing (finder tight) the securing nut, if applicable.

Used tyres should not be fitted if their previous history of use, maintenance or storage conditions are uncertain or unknown. A qualified tyre specialist should inspect the internal and external condition of the used tyres prior to application (see the general recommendations on used tyres for more details).

Tyre fitting and removal for tubeless tyres

In addition to the technical standards shown in the E.T.R.T.O. Standards Manual and the recommendations given by tyre, rim and valve manufacturers in their technical publications, E.T.R.T.O. recommends the following for tubeless tyres

- **Fitting**

  - Ensure that the tyre size selected is compatible with the rim to which it is to be fitted. Check the tyre for any damage or ageing, particularly around the bead seating area. Tubeless tyres shall only be fitted on air tight crotchet type rims, they may be fitted as such either:
    - on airtight rims (‘tubeless rims’), or
    - on adapted crotchet type rims where an appropriate airtight rim tape is fitted to ensure the rimair tightness.
  - Check the rim for damage, particularly do not mount tyres on rims showing any sharp edges or burring around the bead seating area to avoid any tyre damage..

Pay particular attention to the nipple heads, the spoke ends (if protruding inside of the rim well) and the valve hole, which should be smooth, free from burrs or sharp edges. Check and tighten loose spokes. Damaged or distorted spokes or rims shall not be repaired and must be replaced.

- Check the airtight rim tape (if required) and replace it if damaged.
  Position the rim tape (if required) so that the hole for the valve corresponds with the hole in the rim and is laid properly over the well and the bead seat area. Its mechanical strength should be sufficient to withstand the maximum recommended inflation pressure of the tyre and maintain air tightness of the tyre rim assembly. Check that the valve is tightened correctly to the rim well.
- Lubricate the rim (inside) and the tyre around the bead seat area with a recommended lubricant, soapy water or water only. Warning; do not use lubricants which contain hydrocarbons.
- Insert, circumferentially, one bead of the tyre onto the rim. Then starting opposite the valve, insert into the rim also the second bead ensuring that both tyre beads are properly positioned in the deepest part of the rim well. Fitting should be carried out manually and without the use of any metallic tools or metallic lever, to avoid damaging the tyre bead seat area.
- Inflate the tyre quickly until both beads “jump up” into place and correctly engage the rim flange along the whole circumference. To ensure that the beads are seated correctly, completely deflate the tyre. The beads should remain seated. Re-inflate to the operating inflation pressure taking notice of the manufacturer’s recommended pressure marked on the sidewall of the tyre.

Used tyres should not be fitted if their previous history of use, maintenance or storage conditions are uncertain or unknown. A qualified tyre specialist should inspect the internal and external condition of the used tyres prior to application (see the general recommendations on used tyres for more details).

- **Removal**

  - Fully deflate the tyre. Starting opposite the valve, manually unseat one bead of the tyre, by pushing it completely into the rim well.
  - Without using any tools and starting opposite to the valve, lift this bead of the tyre over the rim flange around the full circumference.
  - Unseat the second bead by pushing it into the rim well. Then remove the tyre from the rim. Removal should be carried out manually without the use of any metallic tools or metallic lever, to avoid damaging the tyre bead seat area.

Tubeless ready tyre

- This is a tyre which is not air-tight by itself built with a tubeless-type bead. When the tyre is mounted it becomes air-tight by the means of a sealant liquid and then can be used without the tube.
- To mount the tyre and apply the sealant liquid the instructions given by the tyre and sealant manufacturers must be followed.

Directional tyres

A directional tyre is a tyre that the manufacturer recommends to be used in one direction of rotation. Tyres featuring a V-shaped tread pattern are the most common example of directional tyres. The direction of rotation is generally identified by a directional arrow with the eventual addition of the word “ROTATION” on the tyre sidewall (others wordings like “DIRECTION” or “ROTATE” are sometime used as an alternative).
The fitting of a directional tyre in the opposite direction does not constitute an unsafe condition. Although the tyre is then not fitted as recommended, bicycle overall performance and handling will not be compromised.
Nevertheless, the use of a directional tyre in the opposite direction should be discouraged and should be considered as a temporary measure only. Continued use of a directional tyre in the opposite direction may lead to uneven tyre wear and increased vibration levels.
E.T.R.T.O. further recommends that all tyre manufacturers indicate the preferred direction of rotation on directional tyres with a clear arrow marking on the sidewall of the tyre, and include a clear statement in their technical literature stating that the use of the tyre in the opposite direction should only be considered as a temporary measure.
It should be clearly understood that, notwithstanding the technical recommendations above, the use of directional tyres must also comply with the relevant national legislation.

Care and maintenance

Tyre fitting and removal

It is recommended that these operations be entrusted only to a specialist who has the necessary equipment and expertise. Inexpert fitment may result in personal injury and visible or concealed damage to tyres and wheels. Such damage may lead to failure and possible injury in service.
In exceptional cases where these operations cannot be carried-out by a tyre specialist, it is imperative to comply with the tyre manufacturer's instructions on fitting/removal of tyres or the National Standards in force. Special attention should be paid to the condition and suitability of the rim and to locating the tyre centrally on the rim during inflation with particular care not to exceed the recommended fitting pressure.
If in any doubt, or if any difficulty is encountered, a tyre specialist must be consulted.

E.T.R.T.O. recommends the following and in particular, for safety reasons, tyre fitting and removal on DW and TW type rims must always commence on the flange nearer the lower well irrespective of on which side of the rim the valve is located.

- **Fitting**

  - Ensure the tyre to be fitted is the correct type and size for the vehicle concerned and its intended service.
  - Ensure that the rim is of the correct width and diameter as specified in the published Standard and that the correct off-set is used in order to provide adequate clearance from the vehicle and, where applicable, the correct dual spacing. In case of tubeless tyres, check the suitability of the rim.
  - Always work in safe, clean conditions avoiding soft, open ground.
  - Ensure that all items to be assembled are clean and in good condition. In particular check that the tyres and inner tubes are free from damage and take special care that no foreign matter remains inside the tyre or between the tyre bead and the rim bead seat.
    Remove all contamination (dirt, grease, rust, fitting lubricant, etc.) From the wheel. Inspect the wheel carefully. If it is cracked or deformed, it must be replaced.
    In the case of multi-piece rims, check that the different components are correct and compatible.
    Do not mount tyres on rims showing any sharp edges or burring around the bead seating area to avoid any tyre damage.

- Always fit a new inner tube and flap when replacing a tyre, or a new valve or valve grommet in the case of tubeless tyres, and a new seal when tubeless tyres are fitted on rims with a detachable flange.
  Where no tubeless marking appears on the tyre sidewalls, tyres are intended for fitment with an appropriate inner tube.
- The rim bead seats and the tyre beads must be lubricated with an approved proprietary tyre lubricant only. This applies especially to tubeless tyres. If this recommendation is not followed, bead damage or fracture during fitting could occur.
  Note : The use of hydrocarbons is prohibited.
  The drying time of lubricants have significant impact on tyre to rim mounting and on tyre assembly performance after mounting. For that reason it is recommended to take into consideration the drying time of the lubricants when mounting tyres on rims.
  Lubricant drying time depends, among other factors, upon type of lubricant, the ambient temperature and the amount of lubricant applied. For more details it is recommended to consult the lubricant user manual or conditions of use.
  Do not use an excessive amount of lubricant as this can result in bead ‘creep’ in service.
- Carefully check the condition of the valve hole. The edge of the valve hole on the tyre side of the rim must be rounded and smooth, while on the weather side the edge must be free from any burrs that can damage the valve stem.
  In order to avoid damage to the inner tube or flap, ensure that the valve is located correctly in the valve hole. The use of valve extension pieces is advised for those valves to which access is difficult, as in the case of the inner tyres of twin assemblies.
- In the case of tube-type tyres, dust the tube with French chalk before inserting it into the tyre.
  For tubeless tyres fitted without a tube, the rim must be airtight.
  Where a flap is required, dusting both surfaces with dry talc will help to locate it.
- In the case of one-piece drop centre rims, with the tyre on the rim start the inflation making certain that the beads are correctly located on the bead seat. Until this is done do not exceed the pressure recommended by the tyre manufacturer (usually 250 kPa (2.5 bar)). UN/ECE regulation 106 requests to stamp on both tyre sidewalls a pictogram, as shown in the example, to explicit the maximum inflation pressure not to be exceeded for bead seating during tyre mounting.
  Where incorrect seating occurs, deflate the tyre, rotate it on the rim and re-centralise it before re-commencing inflation. After inflation ensure that the beads are correctly located against the rim flange.
  In the case of tyres fitted on multi-piece rims, with the tyre on the rim and the assembly flat on the ground, inflate until the detachable flange is located correctly against the lock ring. Correct location is facilitated by tapping these rim parts with a rubber hammer during the preliminary inflation. However, the tyre must not be inflated above a pressure of 100 kPa (1.0 bar) before being placed in a safety cage.

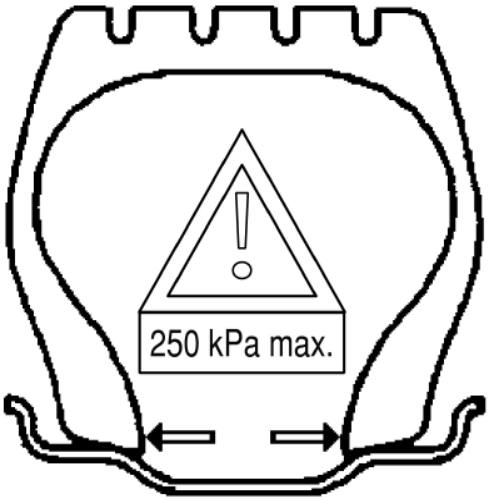

- Ensure that the air line between the valve and the pressure gauge is long enough to enable the fitter to stand clear of any danger from flying components in the event of a tyre or wheel burst.

- **Removal**

  - Before each operation, it is essential to make sure that the tyre is completely deflated by unscrewing and removing the valve insert.
  - In the case of rims of multi-piece construction the operation must start by the removal of the lock ring and the detachable rim flange. At all times the operator must avoid standing in front of the wheel in the path of loose flange components which might spring-off in the case of a damaged wheel.
  - If it is necessary to change a tyre without removing the wheel from the vehicle, the following additional safety precautions must be observed before proceeding as above:
    - Ensure that the vehicle is on firm and level ground. After jacking it up, support the axle with axle stands.
    - Place the valve at its lowest position and apply the handbrake.

  In case the Drop Centre well is not centered on the rim profile, then the mounting and dismounting has to be done from the side closest to the drop centre well. In case of doubts on the mounting and/or dismounting side, the wheel/rim manufacturer should be consulted.

In order to avoid all possible risks of an accident in the above operations, it is recommended that the work is carried-out only by qualified specialists. In particular such work must never be done by an apprentice alone, and if it is done by two or more persons at least one of them must be present throughout the whole operations.

Inflation pressure

These recommendations are specific to Agricultural Tractor and Implement tyres. Items which are common to all products are referred into the General Section and must be considered too.

In general tyres must be inflated according to the load they carry (e.g. if agricultural tractor and implement tyres are to operate for any length of time on roads or other hard surfaces, it is advisable to increase pressures to those recommended by the manufacturer).

In case of vehicle equipped with CTIS (Central Tyre Inflation System) if reduced inflation pressure is used for work in the field, when the tractor change from field to road, before start travelling on the road the driver should wait until the proper tyre inflation pressure is reached considering the load and speed conditions of the vehicle.

Liquid ballasting

Tyres containing liquid ballast must be clearly identifiable. The following precautions must be observed :

- An appropriate air-water valve must be used.
- The liquid ballast should contain an approved antifreeze additive. Consult the tyre manufacturer concerned.
- In the case of tubeless tyres a rust inhibitor, approved by the tyre manufacturer concerned, must be added to the liquid ballast as a protection against corrosion of the rim.
- A special gauge for liquid filled tyres must be used for pressure checks. These should be made with the valve in its lowest position in order to include the pressure due to the liquid in the tyre.
- Before dismounting a liquid ballasted tyre from the rim, ensure that the liquid is completely drained-off. Failure to do this could lead to eventual tyre failure due to deterioration of the cord fabric caused by the residual liquid.

Note : Liquid ballasting procedures and the recommended volume of liquid to be used should be obtained from the tyre manufacturer concerned.

Tyre additives

The tyre industry does not recommend the use of any kind of additive product inside the cavity during the operation as it could alter the tyre and rim assembly performances.
ETRTO recommends to always consult the tyre and rim manufacturers before using any kind of tyre additives

Tyre storage

See pages 12 to 13

Seasonal tyre handling

Some agricultural equipment may be used on a seasonal basis and therefore be out of service for a period of time. During such non operating periods vehicles should preferably be raised on blocks and tyre pressures reduced to 70 kPa (0.7 bar) with the tyres protected by an opaque waterproof cover. Periodic inspection of the tyres is recommended in order to avoid unnecessary breakdowns when the vehicle is brought back into service.
If the above is not possible, tyres should be maintained at their recommended operating inflation pressure.

Wheels

The condition of wheels should be checked regularly particularly for distortion of rims and cracked or damaged wheel discs. Damaged rim flanges may permit the ingress of stones or other foreign bodies between the rim flange and the tyre bead which could lead to tyre failure. In the event of wear/damage to rim flanges, it is recommended that all sharp edges be removed in order to avoid tyre damage during fitting and use. Never rework, weld, heat or braze rims. Whenever any work on rims has to be performed, make sure tyre is demounted first.

> *Damaged, distorted, cracked or broken wheels or components must not be used and should be scrapped.*

Consult the tyre and wheel manufacturers for confirmation of the wheels suitability and strength for the service intended.

- **Wheel selection in dual mounting positions**

The vehicle manufacturer or the tyre fitter should verify that for wheels which are dual mounted, the correct wheel offset is respected. The minimum offset of the selected wheel, should be equal or higher than half of the defined minimum Dual Spacing of the relevant tyre as per ETRTO standard.

Tyre repair and retreading

In the course of their life, tyres are subjected to an enormous number of constraints and can be damaged in many ways. If a repair to a tyre is necessary and feasible, it must be carried-out by a tyre specialist as soon as possible in order to avoid further deterioration of the structure.
In any case, all tyre repairs must be entrusted to a tyre specialist who must then take full responsibility for them.
It is imperative that the work of repairing or retreading is entrusted only to competent companies.
After a careful examination by a specialist to decide if retreading is possible, the retreading company must take total responsibility for the examination and the work carried out on the tyre.

Tyre damage

It is dangerous to neglect tyre damage.
If damage such as a blister, rupture, or cut exposing the casing, is visible on a tyre, or if it has suffered a violent impact such that there has been a risk of internal damage, it must be removed and examined by a tyre specialist as soon as possible to determine whether it is repairable, even though it appears to be sound.
It is dangerous to re-inflate a tyre which has run flat or severely under-inflated and any such tyre must be removed for examination by an expert to check for tyre, tube, valve or rim damage and to be assessed for further service.
Remove any tyre where the bead area is chafed and the casing is exposed in the area where the tyre fits against the rim flange.

Tyre Maintenance

The tyres on a vehicle should be examined regularly with particular attention being paid to the tread for evidence of abnormal wear, cuts, localised deformities and foreign bodies (grit, nails,...), to the sidewall for cuts, cracks, impact damage, abrasions and localised deformities, and to the bead/ rim flange region for signs of chafing, rim damage, mis fitment etc. In cases of any such damage, the tyre must be checked by a specialist.
Following a puncture, it is imperative to stop as soon as possible and change the tyre because running under-inflated causes structural deterioration. A tyre which has been punctured must always be removed from the wheel to be checked for secondary damage.

Tyre ageing

See general recommendation in the “Tyre ageing” chapter at page 15.

Tyres subjected to electrical discharges

Pneumatic tyres can be seriously damaged by electrical contact or discharges that generally originate from direct contact with high voltage electric lines or their electric arcing. Possible consequences are damages that are difficult to detect visibly but which can cause serious degradation of the tyre. These damages may be confirmed by the actual sighting of the contact or can be detected through a destructive examination of the tyre. Therefore, it is recommended that, as a precaution, all tyres on a vehicle that has been subjected to such an electrical contact or arcing should be removed and destroyed to prevent further use or remounting on another vehicle.

Downgraded tyres

It is recommended that downgraded tyres be marked with the following inscription:

DA

There is no restriction on the use of tyres marked ‘DA’
Tyres marked ‘DA’ (on at least one sidewall) are tyres with only minor external blemishes which do not affect their performance in any way.
The location of the marking ’DA’ is left to the discretion of the tyre manufacturer.

Selection of replacement tyres

General

Replacement tyres must be suitable for the type of vehicle and the applications on which they are used. These applications may vary - type of service, route, load, speed - but tyre manufacturers offer a comprehensive range of tyre sizes, constructions and tread patterns and are the only competent authority to advise the user on tyre selection.
This advice is backed by extensive facilities, both in equipment and personnel, for carrying out research and development over the full range of service conditions. In special cases, a change of tyre and/or wheel equipment may be necessary.

Tyre replacement

Used tyres should not be fitted if their previous history of use, maintenance or storage conditions are uncertain or unknown. It is essential always to obtain expert advice from tyre manufacturers or tyre specialists regarding tyre replacement
(See the general recommendations on used tyres for more details).
For safety reasons a new tube must always be used when fitting a new tube type tyre and a new valve or valve grommet in the case of tubeless tyres. All tubeless tyres must be fitted on air-tight rims. Never replace tube type tyres with tubeless tyres.

Tyre mixing

In single fitment, tyres on a given axle must be of the same make, size, structure (radial, bias or bias-belted), category of use, service description-and on approximately the same degree of tread wear.
Tyres in dual fitment must be of approximately the same external diameter and be symmetrically disposed axially.
For all special equipment, the instructions of the tyre, rim/wheel and vehicle manufacturers must be followed.

Tyre load and speed

Replacement tyres must be capable of carrying the actual loads on the vehicle axle at the required speeds. The maximum load capacity of the tyres on an axle, whether in single or dual fitment, must never be less than either the maximum weight per axle specified by the vehicle manufacturer or the legal load limit, whichever is lower.
The tyre sizes recommended in the vehicle or tyre manufacturers' handbooks have been selected bearing in mind the following parameters :

- Maximum axle weight with mounted implements
- Maximum speed
- Service conditions

Tyre manufacturers make agricultural tyres suitable for all purposes and operating conditions. Some of these have heavy treads which can generate relatively high running temperatures. Therefore to ensure good, safe tyre performance it is essential to limit the maximum operating speeds to those specified in the tyre manufacturers' recommendations.
Exceeding maximum speed or overloading (or under inflation) increases the flexing of tyres which leads to excessive heat build up and an increased risk of tyre failure. Additionally, overloading adversely affects tyre/ground contact conditions to the extent that mobility and vehicle stability may be impaired.
The maximum axle weight of an agricultural tractor or implement is often limited by the tyre size chosen either as original equipment or as replacements for specialist purposes (e.g. narrow tyres). Any tyre selected for fitment must be suitable for the intended operation of the machine, including travelling to and from its place of work.

How to read the information marked on the tyre

TRACTION TYRE

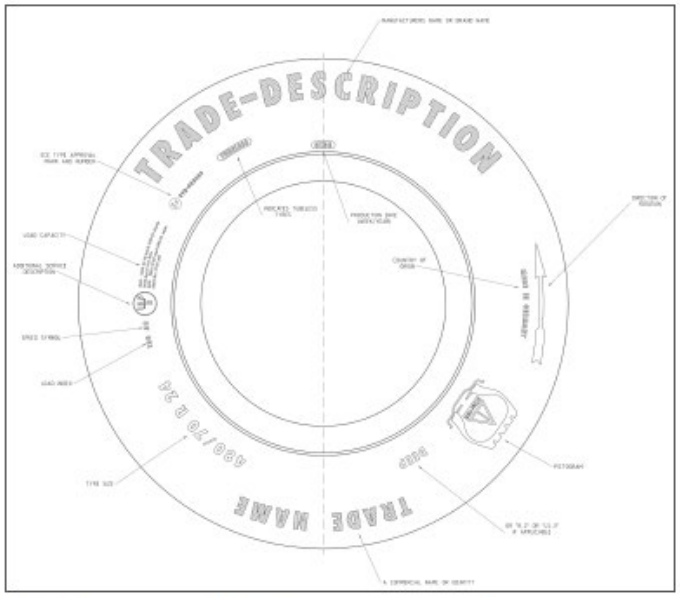

The above sktech is given as an example only. All legal requirements have to be taken into account.

IMPLEMENT TYRE

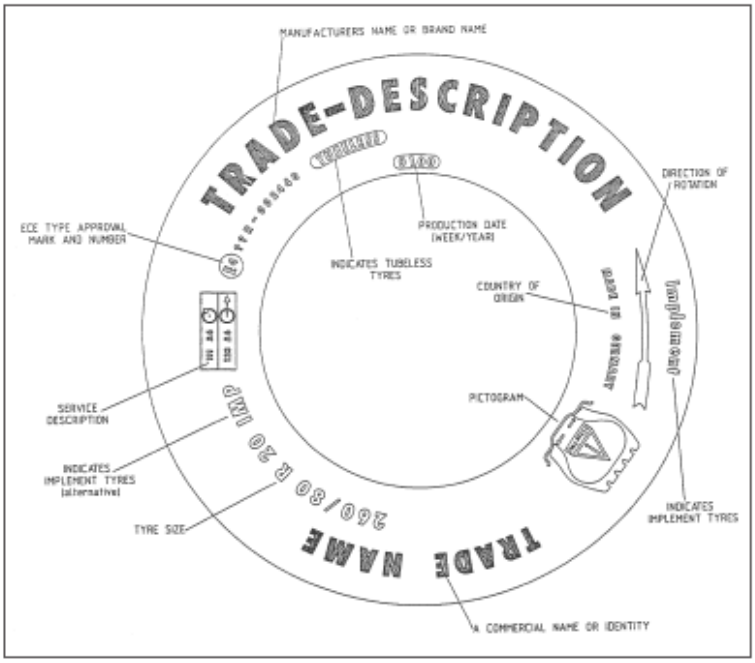

The above sktech is given as an example only. All legal requirements have to be taken into account.

Optional marking of tyre uniformity

Agricultural tyres: low point first harmonic of radial run-out

- marking : a white or yellow coloured spot
- shape : may be round, oval or thumbprint like
- dimension : minimu diameter of 5 mm
- location : near the rim flange on both sidewalls

E.T.R.T.O. Recommendations on Industrial and Lift Truck Pneumatic Tyres

Introduction

Although in the majority of cases industrial pneumatic tyres are used by professionals having a sound knowledge of operating conditions, E.T.R.T.O. considers it necessary to re-state their usage recommendations.

Care and maintenance

Tyre fitting

In addition to the technical standards in the E.T.R.T.O. Standards Manual and the instructions given by tyre, rim and valve manufacturers in their technical publications, E.T.R.T.O. recommends the following:
It is recommended that these operations be entrusted only to specialists who have the necessary equipment and expertise. Inexpert fitment may lead to personal injury and concealed damage to tyres and wheels.
Appropriate presses and accessories are required for fitment of special inserts. The published instructions of the tyre manufacturer must be strictly followed. Only approved proprietary tyre lubricants should be used.

- Ensure that the rim is correct for the tyre size being fitted. Rim components should not be modified nor should components of various rim manufacturers be mixed. All tubeless tyres shall be fitted on airtight rims.
  In case of doubt consult rim/wheel manufacturer.
- Remove all contamination (dirt, grease, rust, fitting lubricant, etc.) From the wheel. Inspect the rim carefully. If it is cracked or deformed, it must be replaced. In the case of multi-piece rims, check that the different components are correct and compatible.
  Do not mount tyres on rims showing any sharp edges or burring around the bead seating area to avoid any tyre damage.
- Always fit a new inner tube and flap , or a new valve or valve grommet in the case of tubeless tyres, and a new seal when tubeless tyres are fitted on rims with a detachable flange.
- Every part recommended by the wheel or tyre manufacturer must be fitted (e.g. bead seat ring, valve slot cover plate, clamp…)

- Check that the tyres and inner tubes are free from damage and take particular care that no foreign matter remains inside the tyre or between the tyre bead and the rim bead seat.
- Lubricate the tyre beads with an approved proprietary tyre lubricant only. If this recommendation is not followed, bead damage or fracture during fitting could occur.
  Note : the use of hydrocarbons is prohibited.
  The drying time of lubricants have significant impact on tyre to rim mounting and on tyre assembly performance after mounting. For that reason it is recommended to take into consideration the drying time of the lubricants when mounting tyres on rims.
  Lubricant drying time depends, among other factors, upon type of lubricant, the ambient temperature and the amount of lubricant applied. For more details it is recommended to consult the lubricant user manual or conditions of use.
- Carefully check the condition of the valve hole. The edge of the valve hole on the tyre side of the rim must be rounded and smooth, while on the weather side the edge must be free from any burrs that can damage the valve stem.
  In order to avoid damage to the inner tube or flap, ensure that the valve is located correctly in the valve hole. The use of valve extension pieces is advised for those valves to which access is difficult, as in the case of the inner tyre of twin assemblies.
- With the tyre on the rim, start the inflation in two steps making certain that the beads are seating correctly on the rim seat. Stop inflating the tyre at 150 kPa (1.5 bar) (1st step), inspect the tyre and ensure that there are no tyre deformation or blisters. Deformations or blister implie the dismounting of the tyre and examination by a specialist. Ensure that the beads are correctly located against the rim flange.
  Then place the tyre in vertical position into a safety cage and inflate it to the specified inflation pressure.
  In the case of tyres fitted on multi-piece rims, with the tyre on the rim, and the assembly flat on the ground, inflate not above 100 kPa (1.0 bar) until the detachable flange is located correctly against the lock ring. Place the assembly in a safety cage. Ensure proper seating of the locking components in the safety cage prior to full pressurization.
- Ensure that the airline between the valve and the pressure gauge is long enough to enable the fitter to stand clear of any danger from flying components in the event of a tyre or wheel burst.

Tyre or wheel removal

- Before each operation, it is essential to make sure that the tyre is completely deflated by unscrewing and removing the valve core (check that the valve is free of any obstacle like dirt or ice).
- In the case of rims of multi-piece construction, for example, the operation must start by the removal of the lock ring and the detachable rim flange. At all times the operator must avoid standing in front of the wheel in the path of loose flange components which might spring-off in the case of a damaged wheel.

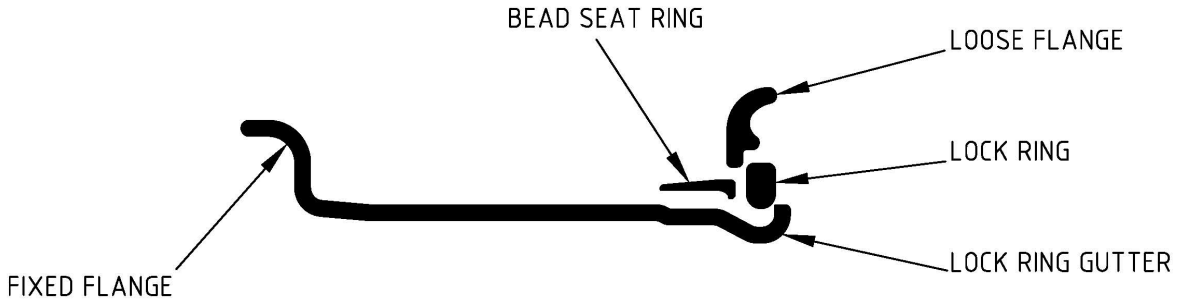

Removal of tyres must be entrusted only to specialists who should scrupulously follow the instructions given by the tyre and wheel manufacturers.

In case the Drop Centre well is not centered on the rim profile, then the mounting and dismounting has to be done from the side closest to the drop centre well. In case of doubts on the mounting and/or dismounting side, the wheel/rim manufacturer should be consulted.

Inflation pressure

These recommendations are specific to Industrial and Lift Truck Pneumatic tyres. Items which are common to all products are referred into the General Section and must be considered too.

In general, the industrial and lift truck tyres must be inflated according to the load they carry.

Storage of tyres, tubes and flaps

See pages 12 to 14.

Wheels

The condition of wheels should be checked regularly particularly for distortion of rim flanges and wheel discs. Cracked rims or wheels must be replaced, paying particular attention to the inside wheel of twin fitments.When removing wheel assembly from the vehicle, before loosening any wheel or rim clamping bolts from a machine it is essential that the tyre (or both tyres in twin (dual) formation or all tyres in other multiple fitments) is (are) completely deflated after the unscrew and removal of the valve core. For safe operations this recommendation must be strictly followed. Beware on large tyres, icing of the valve system can cause it to block the flow of air with the consequence that the tyre will not completely deflate.
In the event of wear/damage to rim flanges, it is recommended that all sharp edges be removed in order to avoid tyre damage during fitting and use.

> *Damaged or distorted wheels, or wheels having stud hole seatings cracked or deformed, must not be repaired or used in service.*

Cracked rims or discs must **never** be welded under any circumstances because the welding will crack again after a very short time under the dynamic stresses involved in running.
In order to avoid tension crack corrosion on the wheels as well as tyre damage, the anti-corrosive protection on the wheel must be fully guaranteed, even on the tyre side of the rim and rings. The surface protection should be checked at intervals and during tyre fitting, and renewed as necessary after removing any contamination from rust.
Exception: rims for conductive tyres must have exposed metal or be treated with surface treatment to encourage conductivity between tyre and rim

- **Wheel selection in dual mounting positions**

The vehicle manufacturer or the tyre fitter should verify that for wheels which are dual mounted, the correct wheel offset is respected. The minimum offset of the selected wheel, should be equal or higher than half of the defined minimum Dual Spacing of the relevant tyre as per ETRTO standard.

Divided wheels

Divided wheels are so constructed, that their two main parts, the rim portions of which may or may not be the same width, when securely fastened together, combine to form a rim having two fixed flanges.
Divided wheels should be designed so, that on the wheel, when it is fitted to the vehicle, only those screws and nuts are accessible, which fit the wheel to the vehicle. The connecting devices of the two wheel parts must differ and only be accessible, when the wheel is demounted from the vehicle. Spot weldings must not be used.
In case where the connecting devices are accessible when the wheel is mounted on the vehicle, they must be clearly identifiable.
The dismounting of the wheel from the vehicle and of the tyre from wheel must be done in the following sequence :

- Complete deflation of the tyre (to have no pressure on the rim),
- Dismounting of the wheel from the vehicle,
- Disconnecting of the two wheel parts and dismounting of the tyre.

When mounting, the tyre shall be only inflated after the connecting devices of the wheels are secure.

Tyre loads and speeds

Industrial tyre load capacities are specified per tyre and also in function of speed. Published Standards or manufacturers' Manuals should be consulted to obtain the actual values applicable to a particular application.
Tyres must be capable of carrying the actual loads on the vehicle axle at the corresponding speed. The maximum load capacity of the tyres on an axle, whether in single or dual fitment,

must never be less than the maximum weight per axle specified by the vehicle manufacturer. Continuous running should be avoided in order to prevent excessive heat build-up which may lead to tyre break-up.

Special applications

Electrical conductive tyres are marked accordingly by the tyre manufacturer. Frequent cleaning by the user is advisable in order to ensure that these properties are maintained.
Do not use solvents for cleaning tyres. Maintain proper electrical contact between the rim and the tyre.

Tyre additives

The tyre industry does not recommend the use of any kind of additive product inside the cavity during the operation as it could alter the tyre and rim assembly performances.
ETRTO recommends to always consult the tyre and rim manufacturers before using any kind of tyre additives

Tyre inspection

It is dangerous to neglect tyre damage. Particular attention is needed to the tread and sidewall for evidence of abnormal wear, cuts, localised deformities and foreign bodies (trapped stones, nails, ...), cracks, abrasion and localised deformities, and to the bead/rim flange region for signs of chafing, rim damage, mis fitment and, between twin tyres, for cracks, abrasions, localised deformities and foreign bodies.
If damage such as a blister, rupture, or cut exposing the casing is visible on a tyre, or if it has suffered a violent impact (for example against a kerb) such that there has been a risk of internal damage, even though there may be no visible evidence, it must be removed immediately and examined by a tyre specialist. Anti-puncture products in the form of liquid sealants are not recommended as they can mask secondary damage and preclude internal examination.

All tyre repairs must be entrusted to an expert who must then take full responsibility for them.

Tyre minimum tread depth

The tread of a tyre is provided with a raised pattern or sculpture the main purpose of which is to ensure maximum tyre grip on wet or slippery roads. However, tread pattern alone does not control tyre grip. In addition to the features of the pattern itself, tyre construction, the chemical composition of the tread, road surfaces, weather conditions, mechanical features of the vehicle, driving style and particularly speed, are all important factors affecting tyre/road adhesion. When driving on public roads, local legislation concerning minimum tread depth must be respected.

Tyre repair and retreading

In the course of its life, a tyre is subjected to an enormous number of constraints and can be damaged in many ways.
If a repair to a tyre is necessary and possible, it must be made as soon as possible after the damage occurs in order to avoid further deterioration of the tyre structure.

It is imperative that the work of repairing or retreading it is entrusted only to competent companies. After a careful examination by a specialist to decide whether repair or retreading is possible, these companies must take total responsibility for the examination and the work carried out on the tyre.

Tyre ageing

Tyres fitted to vehicles which are parked for long periods (e.g. cranes, specialist trailers etc.), will tend to age and crack more quickly than those which are used and run frequently. In such circumstances it is important to jack the weight off the tyres and to cover them so that they are protected from direct light.
In addition to this recommendation, see also general recommendation in the “Tyre ageing” chapter at page 15.

Tyres subjected to electrical discharges

Pneumatic tyres can be seriously damaged by electrical contact or discharges that generally originate from direct contact with high voltage electric lines or their electric arcing. Possible consequences are damages that are difficult to detect visibly but which can cause serious degradation of the tyre. These damages may be confirmed by the actual sighting of the contact or can be detected through a destructive examination of the tyre. Therefore, it is recommended that, as a precaution, all tyres on a vehicle that has been subjected to such an electrical contact or arcing should be removed and destroyed to prevent further use or remounting on another vehicle.

Tyre/rim combinations

For recommended and permitted tyre/rim combinations, consult the current E.T.R.T.O. Standards Manual. For other tyre/rim combinations, for existing vehicles, consult the E.T.R.T.O. Engineering Design Information and the tyre and rim manufacturers concerned.

It has to be checked carefully whether tyre/rim combination is appropriate for tyres which are designed to be fitted without locking ring.
Consult rim and wheel manufacturers for confirmation of the strength of the rim/wheel for the intended service.

Selection of replacement tyres

General

Replacement tyres must be suitable for the type of vehicle and the applications on which it is used. These applications may vary - type of service, route, load, speed - but tyre manufacturers offer a comprehensive range of tyre sizes, constructions and tread patterns and are the only bodies competent to advise the user on tyre selection.
This advice is backed by extensive facilities, both in equipment and personnel, for carrying-out research and development over the full range of service conditions. In special cases, a change of tyre and/or wheel equipment may be necessary.

Used tyres should not be fitted if their previous history of use, maintenance or storage conditions are uncertain or unknown. It is essential always to obtain expert advice from tyre manufacturers or tyre specialists regarding tyre replacement (see the general recommendations on used tyres for more details).
For safety reasons a new tube must always be used when fitting a new tube type tyre and a new tubeless valve where applicable. Insert a new O-ring when fitting a new tubeless tyre.
All tubeless tyres must be fitted on air-tight rims or with air-tight component. Consult the tyre manufacturer for the use of tubes and flaps for radial tyres.
When replacing a tyre, special attention should be paid to the condition and suitability of the rim, as rim damage and incorrect fitment can result in tyre break-up.

Tyre load and speeds

Replacement tyres must be capable of carrying the actual loads on the vehicle axle at the corresponding speed. The maximum load capacity of the tyres on an axle, whether in single or dual fitment, must never be less than the maximum weight per axle specified by the vehicle manufacturer.

Mixed fitments

The best results are obtained by fitting complete sets of diagonal or radial tyres. The following precautions is to be observed:

do not fit tyres of different constructions on the same axle.

The tyres on a given axle must be of the same size, structure (radial, bias or bias-belted), category of use and on approximately the same degree of tread wear. Tyres in dual fitment must be ostensibly of the same diameter (refer to vehicle manufacturer handbook)

There is no objection to mixed fitments such as radial tyres at the front and diagonal tyres at the rear (or vice-versa) should this be desired for any reason. In any case, the stability of the vehicule is to be ensured.

Downgraded tyres

It is recommended that downgraded tyres be marked with the following inscription:

DA

There is no restriction on the use of tyres marked ’DA’.
Tyres marked ‘DA’ (on at least one sidewall) are tyres with only minor external blemishes which do not affect their performance in any way.
The location of the marking ‘DA’ is left to the discretion of the tyre manufacturer.

E.T.R.T.O. Recommendations on Industrial and Lift Truck Solid Tyres

Introduction

Although in the majority of cases Industrial Solid Tyres are used by professionals having a sound knowledge of the using conditions, E.T.R.T.O. considers it necessary to re-state their usage recommendations.

General recommendations

Load and speed ratings of tyres

The load rating is stipulated for each tyre. The values for any given application at a specific speed up to 25 km/h are to be taken from published standards or manufacturer's manuals. Load interpolation within the specific speed steps is not permitted and the speed rating of the tyre must be at least equal to the maximum speed capability of the unladen vehicle.
When determining the permitted load rating, the tare weight of the solid tyres is not included in the vehicle weight.

Overloading, exceeding the maximum speed and lengthy continuous service are all to be avoided, so as to avoid excessive heat build-up that could lead to tyre break-up. The distance covered at maximum speed should not exceed 2000m. A cooling period must follow any journey at maximum speed.

Special service conditions

Solid tyres made of rubber are usually resistant to incidental contacts with oils and greases as well as to most commercially available chemicals.
Before the tyre is used in conditions where it is likely to come into contact with such substances, the tyre manufacturer should be consulted.

Conductive and electrostatically effective tyres are to be marked as such by the manufacturer. As the electrical conductivity may decrease during their use, tyres should be cleaned after service and their conductivity should be checked regularly.

Do not use solvents for cleaning tyres. Ensure proper electrical contact between the rim and the tyre. Rims for conductive tyres must have exposed metal or be treated with surface treatment to encourage conductivity between tyre and rim.

Solid tyres are designed for use at normal temperatures. For use in extreme cold or warm environments, the manufacturer should be consulted.

Care of tyres

Solid tyres require relatively little maintenance but should be checked on a regular basis for their suitability for further use. In particular foreign bodies are to be removed from the treads.

Ageing of tyres

Tyres age even if they are only occasionally used or even not used at all. Cracks in rubber in the external surface is a possible indication of ageing. The effect of sunlight, heat and ozone accelerates the ageing process. Aged tyres should be examined by an expert who can advise whether they may continue in service.

Tyre replacement

Tyres have to be replaced when they are worn out (see Solid tyres on pneumatic tyre rims and rubber solid tyres cylindrical and conical bases “wear limit”) or non-repairable damage has been caused by mechanical injury or ageing in accordance with the tyre manufacturer’s recommendations. Also, national legal requirements should be checked as they vary from country to country.

The original equipment tyres supplied with the new vehicle were selected by vehicle and tyre manufacturers to be suitable for the expected service conditions. Tyre size, type or load rating should not be changed when a tyre is replaced without first asking the vehicle and/or tyre manufacturers if that change could restrict freedom of movement, handling characteristics and/or safety.

The moment major alterations are done on a machine, it has to be checked whether the tyres still comply with the eventually changed weight distributions.

When replacement tyres are fitted, it should be ensured that the rims are in a proper condition. Rim damage and incorrect fitting can lead to tyre failure.

Tyre mixing

Tyres on a given axle must be of the same type and size designation and have approximately the same external diameters. The use of different tyre types (different manufacturers, or even different tyre types of the same manufacturer) can limit the tyre life because of the uneven wheel suspension. Similarly, tyres with different useable remaining tread thickness can limit tyre life because of the uneven load distribution.

Tyre storage

See pages 12 to 13.

.

Regrooving and retreading of tyres

Tyres may only be regrooved by experts and retreaded by professional companies in accordance with the instructions of the tyre manufacturer.

Specifics on rubber solid tyres and pneumatic tyre rims

Tyre fitting

The fitting of rubber solid tyres on pneumatic tyre rims requires suitable presses and tools, and should be performed by qualified persons only.
Ensure that the rim is correct for the tyre size being fitted. Rim components should not be modified nor should components of various rim manufacturers be mixed. In case of doubt consult rim/wheel manufacturer.

It is recommended that during the fitting process the operators wear homologated individual safety protections (glasses, gloves, safety shoes…).
It is recommended that the fitting press is equipped with safety screens protecting the operators against eventually projected metal or rubber parts.

Before fitting the tyre, check the rim and the fitting rings for eventual damage, cracks, deformations.
Always fit concentrically in order not to damage the tyre bead base.
Only approved rim sizes must be used.

Use only fast-drying lubricant. Do not use oil or grease.

The bead base width of the tyre has to correspond with the rim width between the flanges. Pressing a tyre on a too narrow rim can damage the bead base area.

Use the conical mounting ring with the correct diameter corresponding to the wheel type.

In case the rim is designed to be used with a 5°-tapered bead seat ring, the fitting of this is mandatory in order to prevent slipping on the rim. Only tapered rings without collar to be used.

Locking ring: for safety reasons, this part has to be in one piece. The use of 2 halve rings causes serious safety risks both during fitting as well as during use of the tyre.

For self-locking tyres (designed to be fitted without locking rims), it has to be checked carefully whether the tyre – rim combination is appropriate. The recommendations of the manufacturers have to be observed.
Make sure the locking nose of the tyre fits correctly in the rim gutter.

Tread Wear

Introduction

In general the limits of tyre tread wear for industrial trucks are not defined in National or International Standards. Some tyre manufacturers give guidance which is restricted to their own products.
The tyre manufacturers recommendations should always be followed where these are available, but if they are not available this guidance note may be used.

Scope

This guidance note recommends the limits of tyre tread wear for solid rubber tyres used on industrial trucks operating on premises not covered by the Road Traffic Regulations, and where no other recommendation is made by either the manufacturer of the truck or the tyres.
Note: Industrial trucks operating on the public highway must comply with the relevant Road Traffic Regulations.

Definitions

To refer to current Standards Manual and EDI - Section Industrial and Lift Trucks Solid Tyres.

Hazards of excessive tyre tread wear

Tyres must be fitted in accordance with the tyre manufacturers recommendations. The hazards that may be caused by excessive tyre tread wear are:

- Loss of load capacity, causing accelerated wear and overheating.

- The risk of wheel slip under acceleration or braking on low friction surfaces. Further hazards are created if tyres with substantially different amounts of tread wear are used on the same axle, even if they are within the wear limits.
- Reduction of sideways stability of the truck.
- Risk of one wheel slipping under acceleration or braking, causing loss of directional control.
- Uneven tyre loading on twin tyre arrangements.
- Reduction of damping characteristics negatively affecting machines, payload and comfort

Reduction of hazards

To reduce the hazards of clause 4:

- Tyres on any one axle should be made by the same manufacturer, be of same size, (either Rubber or Non- Rubber Tyres, either Cured-on or Pressed-On-Band) and be matched for wear.
- When replacing tyres, all tyres on a given axle should be replaced.

Tyre tread wear limits

- Solid tyres for Pneumatic Tyre Rims

  Wear Indicators or Kerbing Rib are recommended.

  Solid Rubber tyres for Pneumatic Tyre Rims may be used until the tread is worn to the wear indicator, if the tyre has such a marking, or to the top of the kerbing rib, see page IS.3 of EDI. Where there is no indicator, use the tyre until 3/4 of the original total thickness of the tyre remains. To calculate the minimum diameter corresponding to this wear limit, measure the outside diameter of the worn tyre, the outside diameter of an unworn tyre of the same type, make and size, and the diameter of the wheel rim. The minimum permitted diameter of the worn tyre is given by the formula:

$$D_{worn} = 3/4\ (D_{new} - d_{rim}) + d_{rim}$$

  where D_{worn} = the outside diameter of the worn tyre

  D_{new} = the outside diameter of an unworn tyre

  d_{rim} = the diameter of the wheel rim

- Press-On-Band, Cured-On-Band and Conical Base Tyres (Rubber and Non-Rubber)

  Press-On-Band, Cured-On and Conical Base Tyres may be used until 2/3 of the original total radial thickness of the tyre remains, as given by the formula:

Cured-On Tyres:

$$D_{worn} = 2/3\ (D_{new} - d_{rim}) + d_{rim}$$

Press-On-Band and Conical Base Tyres:

$$D_{worn} = 2/3\ (D_{new} - d_{rim} - 20) + (d_{rim} + 20)$$

Notes:

- All dimensions are measured in millimetres.
- The outside diameter of the tyre D_{worn} and D_{new} may be calculated by measuring the circumference of the tyre with a flexible tape, and calculating the diameter from the formula:

$$\text{Diameter} = \frac{\text{Circumference}}{\pi}$$

Specifics on rubber solid tyres (cylindrical and conical base)

Tyre fitting

Rubber solid tyres with cylindrical steelband base have an inside diameter which is smaller than the overall diameter of the wheel. They are fitted by pressing them over the wheel with a suitable press and tools. To facilitate the fitting, grease or oil should be applied at wheel and/or inside of steelband.

It is recommended that during the fitting process the operators wear homologated individual safety protections (glasses, gloves, safety shoes…).
It is recommended that the fitting press is equipped with safety screens protecting the operators against eventually projected metal or rubber parts.

Rubber solid tyres with conical base can be fitted without special tools on center divided two-piece rims.

For other types (e.g. conical base tyres for off center divided two-piece rims, pressed on band solid tyres, …) the recommendations of the manufacturer are to be observed. Oil and grease to be substituted by fast-drying lubricant .

Always fit concentrically in order not to damage either wheel or tyre inside.

Wheel outside diameter to be compliant with E.T.R.T.O. prescribed dimensional tolerances.

Wear limit

As a rule of thumb, a pressed on band rubber solid tyre is considered to be worn out when one third of the original rubber height is depleted. Although at that moment there is still a considerable amount of rubber, the damping characteristics of the tyre decrease , which could cause damage to the machine or the floor.
The manufacturer's relevant recommendations shall be observed.

E.T.R.T.O. Recommendations on Earthmoving Equipment Tyres

Introduction

Although in the majority of cases, tyres for earthmoving machinery are used by professionals having a sound knowledge of operating conditions, E.T.R.T.O. considers it necessary to restate tyre usage recommendations. It should be clearly understood that these recommendations are applicable to tyres used in normal earthmover service. For other conditions it may be necessary to modify or supplement these recommendations following agreement between the tyre, rim and vehicle manufacturers.

Care and maintenance

Fitting and removal

The fitting and removal of earthmover tyres is a specialist operation requiring particular equipment and knowledge. If in doubt consult an expert.

Tyre fitting

In addition to the information shown in the E.T.R.T.O. Standards Manual and the instructions given by tyre, rim and valve manufacturers in their technical publications, E.T.R.T.O. recommends the following:

- Ensure that the rim is correct for the tyre size being fitted. All tubeless tyres should be fitted on airtight rims. Where no tubeless marking appears on the tyre sidewalls, tyres are intended to be fitted with an appropriate tube. A flap may also be necessary.
- Remove all contamination (dirt, grease, rust etc.) From the wheel. Inspect the wheel carefully. If it is cracked or deformed, it should be replaced. In the case of multi-piece rims, check that the components are correct and compatible.
  Do not mount tyres on rims showing any sharp edges or burring around the bead seating area to avoid any tyre damage.
- Always fit a new "O" ring seal when tubeless tyres are fitted on multi-piece rims, the cost of a new "O" ring is negligible compared to the cost of a tyre and is worth the investment. New tubes and flaps are a necessary part of a tube assembly. It is also advisable to fit new valves and sealing washers as a precaution.
- Check that tyres and tubes are free from damage and that the bead area is clean.

- Lubricate the tyre beads with an approved proprietary tyre lubricant only. This applies especially to tubeless tyres. If this recommendation is not followed, bead damage or personal injury could occur.
  Note: the use of hydrocarbons is prohibited.
  The drying time of lubricants have significant impact on tyre to rim mounting and on tyre assembly performance after mounting. For that reason it is recommended to take into consideration the drying time of the lubricants when mounting tyres on rims.
  Lubricant drying time depends, among other factors, upon type of lubricant, the ambient temperature and the amount of lubricant applied. For more details it is recommended to consult the lubricant user manual or conditions of use.
- Carefully check the condition of the valve hole. The edge of the valve hole on the tyre side of the rim should be free of sharp edges, whilst on the weather side the edge should be free from any burrs that can damage the valve stem. In order to avoid damage to the tube or flap, ensure that the valve is located correctly in the valve hole. Valve extensions are frequently required for valves which are difficult to access, as in the case of the inner tyre of twin (dual) assemblies.
- In the case of tyres fitted on multi-piece rims, inflate until the components are correctly in place. Correct location is facilitated by tapping the components with a non-metallic hammer during the preliminary inflation. However, the tyre should not be inflated above a pressure of 50 kPa (0.5 bar) before the component parts are checked for correct location. Once the tyre is mounted on the rim and all components are correctly positioned, continue inflating, stopping at 150 kPa (1.5 bar). Ensure that the beads are correctly located against the rim flange. Inspect the tyre and ensure that the tyre has no deformations. Any deformation requires that the tyre is demounted from the rim for examination by a specialist. Continue inflating to the recommended operating pressure.
  Note : Some tyre manufacturers may advise inflating to a pressure higher than the recommended to ensure beads are correctly seated, then reducing to the recommended pressure.
- Ensure that the airline between the valve and the pressure gauge is long enough to enable the fitter to stand clear of the assembly. Never leave a tyre to inflate whilst unattended.

Tyre additives

The tyre industry does not recommend the use of any kind of additive product inside the cavity during the operation as it could alter the tyre and rim assembly performances.
ETRTO recommends to always consult the tyre and rim manufacturers before using any kind of tyre additives

Tyre removal

- Before loosening any wheel or rim clamping bolts from a machine it is essential that the tyre (or both tyres in twin (dual) formation or all tyres in other multiple fitments) is (are) completely deflated after the unscrew and removal of the valve core. For safe operations this recommendation must be strictly followed..

- Beware on large tyres, icing of the valve stem can cause it to block the flow of air with the consequence that the tyre will not completely deflate.
- In the case of rims of multi-piece construction, for example,

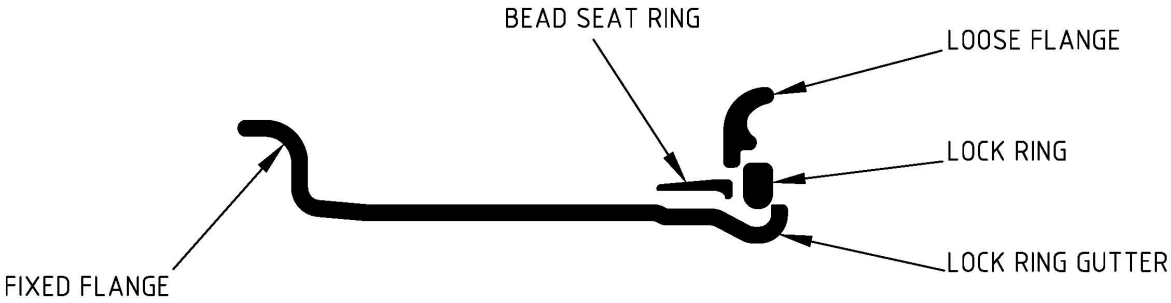

Care should be exercised in the removal of the various components to avoid personal injury.
Attention : rim components can be heavy and under spring tension.
Fitting and removal of tyres should be done by competent personnel by following the instructions given by the tyre and wheel/rim manufacturers.

In case the Drop Centre well is not centered on the rim profile, then the mounting and dismounting has to be done from the side closest to the drop centre weel. In case of doubts on the mounting and/or dismounting side, the wheel/rim manufacturer should be consulted.

Inflation pressure

These recommendations are specific to Earthmoving Equipment tyres.
Items which are common to all products are referred into the General Section and must be considered too.

Load versus cold inflation pressure tables published by tyre manufacturers take into account the operating conditions of the machines such as load and speed.
Therefore checks should be made preferably when the tyres are cold. Tyre pressures should be checked visually on a daily basis and once every week actually checked using an accurate pressure gauge.
In cases where the machines run 24 hours/day, a natural inflation pressure increase of +15 to 20% resulting from tyre operating temperature is typical when tyres are warm and doesn't require a pressure adjustment.
Some large earthmover tyres may take 8 hours or more to reach their working temperature. Note that a driver will not always be aware of deflated tyre - for example in the case of tyres fitted in twins (duals).

Nitrogen gas inflation for earthmover tyres

Tyres inflated with air in normal conditions of use do not pose any specific problems either with regards to endurance or with regards to safety.
Nitrogen gas can be used to inflate tyres **to eliminate the risk of internal combustion** of the tyre with the resultant possibility of explosion.

100% nitrogen inflation will eliminate this risk by eliminating the oxygen necessary for combustion and explosion.
For the explosion scenario to develop, extra heat must be added to that developed by the tyre in normal service for internal combustion to occur. An outside energy source is the most likely cause.
Some sources of extra energy or heat :

- **Welding on or applying heat to the wheel (such as heating damaged wheel nuts).**
  Even not inflated and unseated, a tyre on a rim can explode due to external heat applied to the wheel releasing volatile vapours into the tyre cavity. Even if tyres are nitrogen inflated, applying heat to a wheel with a tyre still fitted should never be allowed, as it is impossible to be sure that the tyre has no oxygen (air) in it!

- **Electricity.**
  Vehicles that come into contact with high voltage power lines, or get struck by lightning can cause tyres to explode at the moment of contact or soon after. Nitrogen inflation will prevent tyre explosion.

- **Overheating vehicle parts.**
  Abnormal heating of brakes, hubs, wheel motors, etc. Can be transmitted to the tyre via the rim. **Nitrogen inflation will prevent an internal tyre fire and possible explosion.**

- **Hot environment.**
  Such as in a steel works.

- **Overheating tyres.**
  Caused by underinflation, overload, running faster than the tyre's limit, or a mixture of all three. The cause of the problem should be eliminated if possible. **Nitrogen inflation will not remove the problem, but will give an added safety margin if a tyre fire occurs.**

- **Some other advantages of nitrogen inflation:**

  - Better stability of pressure with time, since nitrogen diffuses through rubber slower than air. Modern tubeless tyres have butyl liners with a very slow rate of air diffusion, so this advantage may be difficult to measure.
  - Reduced oxidation of the rim: permits easier dismounting of tyres and better maintenance of the rims, and possibly longer rim life.

- Using nitrogen for inflation minimises the risk of introducing unwanted substances in the tyres during inflation. The air from compressors can contain water and/or oil, which will increase the problems of oxidisation and variations of pressure with variation in temperature.

- **Precautions with nitrogen inflation:**

  - If high pressure (~15000 kPa (150 bar)) nitrogen gas cylinders are used, precautions are necessary for correctly using pressure reducers and interconnecting the cylinders, and for stocking, handling and transporting the cylinders. It is highly recommended to have a special training for personnel handling this type of pressure vessel. For a large operation, an on-site nitrogen plant is a better solution.
  - Note that if the recommended tyre inflation pressure is below 500 kPa (5.0 bar), nitrogen inflation alone will be insufficient to reduce the amount of oxygen in the resultant air/nitrogen mixture inside the tyre to safe levels. The tyre will need to be purged of air, a complex and lengthy procedure.

- **E.T.R.T.O. advice**

  - E.T.R.T.O. endorses nitrogen inflation for its advantages, particularly in extreme service conditions.
  - E.T.R.T.O. does not however give a blanket recommendation to nitrogen inflate, as the benefits may not be very apparent in many earthmover tyre applications. The difficulties associated with handling heavy high-pressure gas bottles must also be taken into account.
  - Each case should be treated on its merits, using the information given above, so that an appropriate inflation policy can be established.
  - If a nitrogen inflation policy is adopted, the specialist supplier of the nitrogen should be consulted regarding equipment and staff training recommendations.

Liquid ballasting

E.T.R.T.O. does not recommend liquid ballasting but recognize that for certain operations, it may be required. Therefore the following notes are for guidance purpose only.
Ballasting consists in increasing the weight of the tyre assembly.(before ballasting, consult the machine manufacturer).
Tyres containing liquid ballast must be clearly identifiable.

The following precautions must be observed :

- An appropriate air-water valve must be used if available.
- A 100% filling is not recommended; 75% is more appropriate.
- The liquid ballast should contain an approved antifreeze additive.
  Consult the tyre manufacturer concerned.
- In the case of tubeless tyres, a rust inhibitor, approved by the tyre and rim manufacturer concerned, must be added to the liquid ballast as a protection against corrosion of the rim.

- A special gauge for liquid filled tyres must be used for pressure checks. These should be made with the valve in its lowest position in order to include the pressure due to the liquid in the tyre.
- Before dismounting a liquid ballasted tyre from the rim, ensure that the liquid is completely drained - off. Failure to do this could lead to eventual tyre failure due to deterioration of the cord fabric caused by the residual liquid.

Note : Liquid ballasting procedures and the recommended volume of liquid to be used should be obtained from the tyre manufacturer concerned.

Tyre storage

See pages 12 to 13.

Handling of tyres, tubes, flaps, "O" ring seals and rims

Proper handling will prevent damage to tyres.
Do not lift tyres by the beads. Sharp hooks or forks cut and tear beads. In service, beads may leak at these lifting points.
Foreign material and moisture should be removed from the inside before fitting to the rim.
Tubeless rims are an important part of the air seal in a mounted tyre. Do not distort or mutilate rim parts.
Never lift rims by valve holes.
Never drop, tumble or roll rim parts.
Use babbit or lead hammers sparingly during assembly. Sledge hammers can damage rim parts.

Dismounted tyres

Carefully clean and inspect tyres and make any necessary repairs before storage. Repairs to damage which expose tyre cord are especially important. Moisture can get into exposed cord and cause it to deteriorate.
Observe the same storage rules for dismounted tyres as for new tyres.

Mounted tyres

- If tyres are stored on a machine, it should be jacked up free of the ground and the inflation pressure reduced to approximately 200 kPa (2.0 bar).
- If the machine cannot be jacked up, maintain pressure at the recommended level.
- Protect each tyre with an opaque, waterproof cover.

- Machines standing on tyres should be moved once a month. This prevents deflection strain on only one part of the tyre.
  Do not use paint to preserve tyres. If severe storage conditions are expected, consult tyre supplier for recommendations.

Wheels

The condition of wheels should be checked regularly for damage. It is essential that cracked rims or components be replaced; pay particular attention to the inner wheel of tyres fitted in twins (duals). It is essential that tyres are deflated before they are removed from the vehicle.
In the event of wear/damage to rim flanges, all sharp edges should be removed in order to avoid tyre damage during fitting and use.

It is essential that damaged or distorted wheels are not repaired or used in service.

Cracked rims or discs should never be welded under any circumstances because the welding will probably crack again after a very short time under the dynamic stresses involved in running. Paint or coat with a rust inhibitor, all parts of the wheel to avoid corrosion.

- **Wheel selection in dual mounting positions**

The vehicle manufacturer or the tyre fitter should verify that for wheels which are dual mounted, the correct wheel offset is respected. The minimum offset of the selected wheel, should be equal or higher than half of the defined minimum Dual Spacing of the relevant tyre as per ETRTO standard.

Tyre damage

It is inadvisable to neglect tyre damage.
If damage such as a rupture, or a cut exposing the casing is visible on a tyre, or if it has suffered a violent impact (for example against a rock) such that there is risk of internal damage, it should be removed and examined by a tyre specialist as soon as possible to determine whether it is repairable, even though it may appear to be sound.
If a repair to a tyre is necessary and possible, it should be made as soon as possible after the damage occurs in order to avoid further deterioration of the tyre structure.
All tyre repairs should be entrusted to an expert who must then take full responsibility for them.
The exposure of a tyre structure to temperatures in excess of 90°C will cause a permanent damage to the tyre and this is to be avoided. Such exposure may be caused by exhaust pipes, brakes and hubs, ...

Minimum tread depth and regrooving

- **Minimum tread depth**
  Whilst earthmover tyres are not subject to legal minimum remaining tread depth legislation, unless the machine is used on a public highway (e.g. mobile cranes), the tread depth at which tyres need to be removed from service vary according to the operating conditions.

Where traction is required, consideration needs to be given to having sufficient tread depth to provide the necessary traction. In other circumstances where the adhesion is acceptable, tyres can be used until the remaining pattern depth is zero or approaching it (e.g. working on rock or sand).

- **Regrooving**
  If a tyre is suitable for regrooving then the following precautions need to be observed.

General

Regrooving or recutting consists of cutting a pattern in the tread, deeper than the original pattern, in order to extend the tyre life. Care should be taken to ensure that the regrooving process does not expose the tyre casing, breakers or belts and that sufficient rubber is left for its protection. Tyre manufacturers publish instructions regarding the patterns to follow when regrooving their tyres as well as the relevant recommended widths and permitted depths below the base of the original pattern.
European and North American regulations require that ‘each new tyre designed and constructed for regrooving shall be labelled on both sidewalls with the word ‘regroovable’ or the symbol ‘ ’ at least 20 mm in diameter. A minimum rubber thickness of 4 mm between the bottom of the original principal grooves and the upper surface of the belt is necessary to classify a tyre as regroovable.

Technical requirements

- A minimum rubber thickness of 4 mm between the bottom of the principle grooves and the upper surface of the belt is necessary to classify a tyre as regroovable.
- Regrooving should only be carried-out by specially trained personnel.
- On no account must tyres that have been worn smooth be regrooved (even if the smooth area is limited) as there is no indication of how much base rubber is left.
  As there can be a degree of uneven tread wear, with most tyres it is better to check the tyre for regrooving when a sufficient amount of protection base rubber of at least 2 mm will be remaining.
- Before regrooving, the tyre should be examined to ensure that it is in good condition and to ensure the tyre has not been previously regrooved. To trained personnel it is usually obvious if a tyre has been regrooved previously since the groove will not have sharp corners on zigzag grooves and there will be marks in the groove left by the regrooving tool. However, if the new tyre had tread wear indicators or tie bars, these will no longer be visible as they will have been removed during the first regrooving process. Should it be considered necessary or desirable to completely or partially regroove the tyre more than once, the tyre manufacturer **must** be consulted.
  Any damage or unsatisfactory repair should be repaired correctly in advance. If the tread shows evidence of cracking, multiple cuts,or tearing of the tread blocks, then regrooving is not recommended.
  Remove flints and other foreign bodies trapped in the tread rubber to avoid damage to the cutting blade or the tyre.

Regrooving should be carried-out with a regrooving tool which has an electrically heated blade and preferably in a well ventilated place.

- Choose a blade the width of which corresponds to the width of regrooving recommended in the instructions issued by the tyre manufacturer for the specific tread pattern and tyre size.
- The actual remaining depth should be measured at several places around the tyre. The depth of cut on the cutting tool must be related to the minimum pattern depth found.
- To set the cutting blade, add the minimum pattern depth measured to the permitted regroove depth specified in the instructions issued by the tyre manufacturer for the specific tread pattern and tyre size.

- **Example**

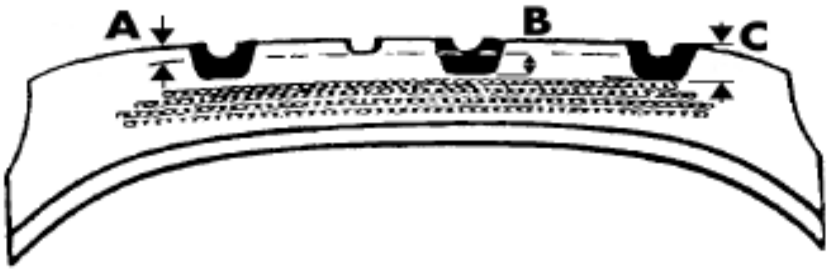

Minimum remaining depth of the original pattern	→	**A**
Permitted regroove depth from the tyre manufacturer's instructions	→	**B**
Depth of setting of the cutting blade	→	**C = A + B**

- Proceed to regroove the tread exerting even pressure following the re-cut pattern straight through any tread tie-bars, as shown in the instructions issued by the tyre manufacturer for the specific tread pattern and tyre size.
- When the above procedures are carefully followed a sufficient amount of the base rubber remains to protect the tyre casing, breakers or belts. In no case must any part of the cord structure of the tyre be cut or exposed as this renders the tyre unsafe and is likely to preclude subsequent retreading.

Tyre repairing and retreading

In the course of its life, a tyre is subjected to an enormous amount of repetitive stress and can be damaged in many ways. It is essential that the work of repairing or retreading is entrusted only to competent persons. After a careful examination by a specialist to decide whether repair

or retreading is possible, full responsibility for the examination and the work carried out on the tyre is taken by the specialist.

Tyre ageing

Tyres fitted to machines which are parked for long periods (e.g. cranes, specialist trailers etc..), will tend to age and crack more quickly than those which are used and run frequently.
In such circumstances it is important to take the weight off the tyres and to cover them so that they are protected from direct light.
When stored fitted on rims, inflation pressure should be reduced to a maximum of 200 kPa (2.0 bar) and, whether fitted on rims or not, covered with a waterproof cover.
Particular attention should be paid to spare tyres which may be old or aged.
In addition to this recommendation, see also general recommendation in the “Tyre ageing” chapter at page 15.

Tyres subjected to electrical discharges

Pneumatic tyres can be seriously damaged by electrical contact or discharges that generally originate from direct contact with high voltage electric lines or their electric arcing. Possible consequences are damages that are difficult to detect visibly but which can cause serious degradation of the tyre. These damages may be confirmed by the actual sighting of the contact or can be detected through a destructive examination of the tyre. Therefore, it is recommended that, as a precaution, all tyres on a vehicle that has been subjected to such an electrical contact or arcing should be removed and destroyed to prevent further use or remounting on another vehicle.

Tyre/rim combinations

For recommended and permitted tyre/rim combinations, consult the current E.T.R.T.O. Standard Manual. For other tyre/rim combinations for existing machines, consult E.T.R.T.O. Engineering Design Information and the tyre and rim manufacturers concerned.
Consult rim and wheel manufacturers for confirmation of the strength of the rim/wheel for the intended service.
Component parts from multi-piece rims are not always interchangeable, consult the rim or wheel manufacturer for advice.

Selection of replacement tyres

General

It is essential that replacement tyres are suitable for the type of vehicle and the applications on which they are used. These applications may vary - type of service, load, speed - but tyre manufacturers and their dealers offer a comprehensive range of tyre constructions and tread patterns and are the only bodies competent to advise the user on tyre selection. This advice is backed by extensive facilities, both in equipment and personnel.
Used tyres should not be fitted if their previous history of use, maintenance or storage conditions are uncertain or unknown. It is essential always to obtain expert advice from tyre manufacturers or tyre specialists regarding tyre replacement (see the general recommendations on used tyres for more details).

Tyre load and speeds

Replacement tyres must be capable of carrying the actual loads imposed on them at the operating speed. The maximum load capacity of the tyres on an axle, whether in single or twin formation (duals), must not be less than the maximum weight per axle as specified by the vehicle manufacturer.

Mixed fitments

The best results are obtained by fitting complete sets of diagonal or radial tyres. However, mixed fitments will not give rise to any handling problems on the machine if the following precautions are observed.

- On any machine, do not fit tyres of different constructions on the same axle.
- On machines having multiple axles (bogies), do not fit tyres of different constructions on these axles.

There is no objection to mixed fitments such as radial tyres at the front and diagonal tyres at the rear (or vice-versa) should this be desired. However, in cases where one type is to be replaced by another, the tyre manufacturer should be consulted about special recommendations for fitments in specific operating conditions.